# Renault / Nissan ODX Authoring Guidelines for B/C based ECUs

| | |
|---|---|
| Version | **02.1.0** |
| Status | Officialised |
| Author | Altran - MLR |

## Revision History

| Version | Name | Chapter, short summary |
|---|---|---|
| 02.1.0 | Altran – MLR | Document created |
| | | |
| | | |



Confidential C

# Content

List of Figures ..... 4

List of Tables ..... 5

1 Purpose, Goal and Scope ..... 6

2 Documents, Terms and Conventions ..... 7

2.1 Related Documents ..... 7
2.2 Terms, Acronyms and Abbreviations ..... 7
2.3 Document Conventions ..... 8

3 Authoring Guidelines ..... 9

3.1 Preface ..... 10
3.1.1 General ..... 10
3.1.2 Definitions ..... 10
3.2 General Requirements ..... 11
3.2.1 XML-ID ..... 11
3.2.2 OID ..... 11
3.2.3 TID ..... 11
3.2.4 ELEMENT-ID ..... 12
3.2.5 COMPANY-DATA ..... 14
3.2.6 ADMIN-DATA ..... 14
3.3 ODX-D ..... 15
3.3.1 DIAG-LAYERs ..... 15
3.3.2 DIAG-LAYER-CONTAINERs ..... 22
3.3.3 FUNCT-CLASS ..... 24
3.3.4 TABLEs ..... 25
3.3.5 DIAG-SERVICEs ..... 43
3.3.6 GLOBAL-NEG-RESPONSE ..... 81
3.3.7 DIAG-DATA-DICTIONARY-SPEC ..... 82
3.3.8 STATE-CHART ..... 85
3.4 ODX-C / ODX-CS ..... 88
3.4.1 Overwriting of ISO 15765-2 Communication Parameters ..... 88
3.4.2 Overwriting of ISO_14229_5_DIS_2015 Communication Parameters ..... 88
3.4.3 Overwriting of ISO_13400_2_DIS_2015 Communication Parameters ..... 88

Annexes ..... 89

Annex A Prefixes for XML-IDs of ODX Object Instances ..... 89



Confidential C

# List of Figures

Figure 2 DIAG-LAYER-CONTAINERs ..... 22
Figure 3 Specification of Diagnostic Sessions with TABLE Sessions ..... 25
Figure 4 Specification of Static DIDs with TABLEs DIDs_Readable and DIDs_Writable ..... 27
Figure 5 DTC, Device and Failure Type Tables ..... 31
Figure 6 Snapshot Tables ..... 33
Figure 7 Extended Data Record TABLE ..... 36
Figure 8 Tables for security access levels ..... 38
Figure 9 Specification of ECU reset types with TABLE TA_S11 ..... 40
Figure 10 Structure of DIAG-SERVICE StartDiagnosticSession (0x10) ..... 46
Figure 11 Structure of DIAG-SERVICE ReadDataByLocalIdentifier ($21) ..... 47
Figure 12 Structure of DIAG-SERVICE SupportedReadableLIDs ($21) ..... 48
Figure 13 Structure of DIAG-SERVICE Read_Identification_80 ($2180) ..... 49
Figure 14 Structure of DIAG-SERVICE Read_Identification_83 ($2183) ..... 50
Figure 15 Structure of DIAG-SERVICE ReadDataByIdentifier ($22) ..... 51
Figure 16 Structure of DIAG-SERVICE ReadDataByIdentifier_MultiId ($22) ..... 52
Figure 17 Structure of DIAG-SERVICE WriteDataByLocalIdentifier ($3B) ..... 53
Figure 18 Structure of DIAG-SERVICE SupportedWritebleLIDs ($3B) ..... 54
Figure 19 Structure of DIAG-SERVICE WriteDataByIdentifier ($2E) ..... 55
Figure 20 Structure of DIAG-SERVICE IOControlStartTemporary ($30) ..... 56
Figure 21 Structure of DIAG-SERVICE IOControlStartPermanent ($30) ..... 57
Figure 22 Structure of DIAG-SERVICE IOControlStatus ($30) ..... 58
Figure 23 Structure of DIAG-SERVICE IOControlStop ($30) ..... 59
Figure 24 Structure of DIAG-SERVICE SupportedIOControlableLIDs ($30) ..... 61
Figure 25 ReadDtcInformation – ReportDtcByStatusMask ($1902) ..... 63
Figure 26 ReadDtcInformation – ReportDtcSnapshotRecordByDtcNumber ($1904) ..... 65
Figure 27 ReadDtcInformation – ReportDtcExtDataRecordByDtcNumber ($1906) ..... 67
Figure 28 Structure of DIAG-SERVICE ClearAllDiagnosticInformation ($14) ..... 68
Figure 29 Structure of DIAG-SERVICE StartRoutineByLocalIdentifier – Perform routine request (0x31) ..... 69
Figure 30 Structure of DIAG-SERVICE StartRoutineByLocalIdentifier – Status request (0x31) . 70
Figure 31 Structure of DIAG-SERVICE SupportedRoutineControlableLIDs ($31) ..... 71
Figure 32 Structure of DIAG-SERVICE StopRoutineByLocalIdentifier (0x32) ..... 72
Figure 33 Structure of DIAG-SERVICE SecurityAccess_requestSeed ($27) ..... 73
Figure 34 Structure of DIAG-SERVICE SecurityAccess_sendKey ($27) ..... 75
Figure 35 Structure of DIAG-SERVICE ECUReset (0x11) ..... 76
Figure 36 DIAG-SERVICE TesterPresent ($3E) ..... 77
Figure 37 DIAG-SERVICE CommunicationControl ($28) ..... 78
Figure 38 DIAG-SERVICE ReadMemoryByAddress ($23) ..... 79
Figure 39 DIAG-SERVICE WriteMemoryByAddress ($3D) ..... 80



Confidential C

Figure 40 Structure of GLOBAL-NEG-RESPONSE ..... 81

# List of Tables

Table 1 Terms, Acronyms and Abbreviations ..... 8
Table 2 Predefined ECU-SHARED-DATA Layers ..... 16
Table 3 Predefined PROTOCOL Layers ..... 17
Table 4 Predefined FUNCTIONAL-GROUP Layers ..... 18
Table 5 Matching Parameters in ECU-VARIANT-PATTERNs of Renault ECUs ..... 20
Table 6 Matching Parameters in ECU-VARIANT-PATTERNs of Nissan ECUs ..... 21
Table 7 Predefined DIAG-LAYER-CONTAINERs available for reuse ..... 23
Table 8 Renault / Nissan FUNCT-CLASSes ..... 24
Table 9 Overview of DIAG-SERVICEs and their FUNCT-CLASSes ..... 45
Table 10 Predefined Session States ..... 86
Table 11 Predefined Security Access Levels ..... 86
Table 12 Prefixes for XML-IDs of ODX Object Instances ..... 90



Confidential C

# 1 Purpose, Goal and Scope

The authoring guidelines (and associated artifacts) encompass the definition of (mass) data, diagnostic services, communication parameters and vehicle interfaces and cover the ODX types ODX-D, ODX-C and ODX-V. ODX-E and ODX-F were deemed out of scope of the study or were covered by parallel projects.

The evolving ODX authoring guidelines were evaluated by creating concrete ODX models in parallel to the extension of this document which were then tested with the ADT-3 D-Server and CANoe.



Confidential C

# 2 Documents, Terms and Conventions

## 2.1 Related Documents

[1] ISO 22901-1 Road vehicles - Open diagnostic data exchange (ODX) - Pt1: Data model specification

[2] Renault Standard 36-00-013/C – Diagnostic on CAN: Diagnostic Services Implementation (2010)

## 2.2 Terms, Acronyms and Abbreviations

| Term | Definition |
|---|---|
| ADT3 | ADT3 is the MCD-3D server whose conception and introduction was the focus of the according project conducted in parallel to the ODX data study. |
| AGL | Authoring Guideline. |
| BV | BASE-VARIANT (a major structural building block of ODX models). |
| Device | At Renault / Nissan a device represents a component inside an ECU, for which the ECU might store DTCs and/or snapshots. |
| DLC | DIAG-LAYER-CONTAINER |
| DTC-DOP | ODX object representing diagnostic trouble codes. |
| ESD | ECU-SHARED-DATA (a major structural building block of ODX models). |
| EV | ECU-VARIANT (a major structural building block of ODX models). |
| FG, FGL | Functional Group Layer (a major structural building block of ODX models). |
| Function | Renault / Nissan term representing a common use case of ECUs (e.g. ABS, Airbag, etc.). Only exactly one ECU of a particular function is built into a vehicle. All ECUs belonging to a particular function share the same CAN-Identifiers and DoIP logical addresses. In ODX, they are defined inside of FUNCTIONAL-GROUPS contained in a function DIAG-LAYER-CONTAINER. |
| Function DLC | A DIAG-LAYER-CONTAINER containing FUNCTIONAL-GROUPs predefining the CAN-Identifiers and DoIP logical addresses of all ECUs belonging to the same function. |
| Global Snapshot | In most Renault / Nissan ECUs, there are snapshot DIDs which must be supported by each and every snapshot record. At Renault / Nissan, these snapshot DIDs are called “global snapshot DIDs”. The set of all global snapshot DIDs is called the “global snapshot” of an ECU. |
| Item List | Document internal to Nissan diagnostics department defining diagnostic contents of an ECU (e. g. DIDs). |
| PR, PRL | Protocol Layer (a major structural building block of ODX models). |



Confidential C

| | |
|---|---|
| RFQ | Zip file containing interrelated diagnostic specifications of one version, together valid at one particular point of time, defining the presets valid at the beginning of an ECUs development and governing the development from thereon. |
| RFQ layer | ODX files which are delivered as part of RFQ packages, containing predefined ECU-SHARED-DATA and PROTOCOL layers to be reused for concrete ECU projects. |
| SDG | Special Data Group. An optional structural ODX component intended for extension of arbitrary ODX objects with OEM specific information not covered by the ODX standard. |
| SNREF | SHORT-NAME Reference. |

*Table 1 Terms, Acronyms and Abbreviations*

## 2.3 Document Conventions

In this document, the following terminology applies:

- "Shall" expresses an obligatory/mandatory requirement.
- "Should" expresses a recommendation or an advice.
- "Must" expresses a legal or normative requirement.
- "Will" expresses a precautionary consideration or an additional/optional feature.
- "May" expresses a permitted practice/method, not to be considered as a requirement.



Confidential C

# 3 Authoring Guidelines

This chapter specifies the requirements for ODX descriptions used at Renault or Nissan. Its intention is to facilitate all ODX based diagnostic processes by defining rules and recommendations for authors of ODX models created to be used within Renault or Nissan.



Confidential C

# 3.1 Preface

## 3.1.1 General

Authoring rules defined in ISO 22901-1 [1] remain unchanged.

If this document does not address a specific optional element, the author is free to decide to use the element or not. If addressed, the author shall follow the specific rules defined in this document for the respective elements. Some optional elements are thereby deemed mandatory to use, others are forbidden to use.

The end of each chapter may contain a paragraph specifying the according implementation requirements. These requirements are defined as one of the following:

- [Rule] := Mandatory rule to be followed by ODX authors
- [Rule/xsd] := Mandatory rule which is covered by the Renault / Nissan ODX XML schema
- [Reco] := Recommendation

## 3.1.2 Definitions

This document makes widely use of figures to express structural DIAG-SERVICE definitions. The following rules apply to reading such a figure.

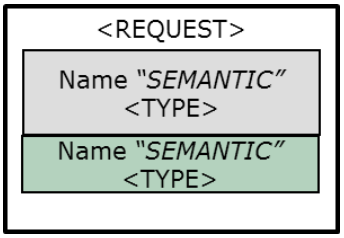


The figure contains the following information:

<TYPE> gives the Type of ODX-Element used (e.g. CODED-CONST, TABLE-KEY,..)

Name is actually used for illustration purposes only. It might define the LONG-NAME or the SHORT-NAME of the object or none of them.

"SEMANTIC" defines the value of the "ODX SEMANTIC element" which shall be associated with the object. The SEMANTIC value shall be used by client-applications of the ODX data (testers, validation tools) to discern / identify specific elements in Renault / Nissan ODX models.

defines that the value of the element is defined at runtime

defines that the value of the element is defined in the model as a constant value (e.g. a service ID)

defines that the element has primarily structural meaning

→ defines "structural" references (ODX-LINK)

- → defines "informational" references (SHORT-NAME reference)



Confidential C

## 3.2 General Requirements

### 3.2.1 XML-ID

XML-IDs support referencing elements within ODX documents. Additionally, the IDs of Renault / Nissan documents shall simplify the detection / identification of referenced elements. As a result, every XML ID should be composed according to the following specific rules.

First, we assume that *elem* is an ODX element which can carry an ID. We define the following:

PREFIX(*elem*) is the prefix of *elem* as defined in Annex A.

PARENT(*elem*) is the next outer parent ODX element, which carries an ID.

The XML ID of the ODX element *elem* is defined as following:

```
                 elem is instance
                 of ODX-CATEGORY       : No further building rule.

                 elem is a direct
ID(elem):=       child of an instance
                 of ODX-CATEGORY       : PREFIX(elem) + "." + elem.SHORT-NAME

                 any other instance    : ID(PARENT(elem)) + "." + PREFIX(elem) + "." + elem.SHORT-NAME
```

An XML-ID of a DATA-OBJECT-PROP “Speed” (=SHORT-NAME) inside the ECU-VARIANT “B_Sample” of a DIAG-LAYER-CONTAINER “ALL_VARIANTS” would look like:

```
ID(elem) = DLC.ALLVARIANTS.EV.B_Sample.DOP.Speed
```

Implementation requirements:

[Rule] In Renault / Nissan ODX models, hierarchical XML-IDs as specified above should be used.

[Rule] For predefined DLCs and contained layers distributed via Renault / Nissan RFQ packages, the XML-ID must encompass the version number of the DLC.

### 3.2.2 OID

In ODX, several objects might carry an Object-ID (OID). This OID allows identifying an object during its lifecycle.

For Renault / Nissan, there are no restrictions concerning the usage of OIDs.

### 3.2.3 TID

ODX uses Text Identifiers (TI) to support multi language aspects of diagnostic data.

Text Identifiers (TI) are compiled into the runtime format.



Confidential C

## 3.2.4 ELEMENT-ID

### 3.2.4.1 SHORT-NAME

#### 3.2.4.1.1 General SHORT-NAME Building Rules

ODX uses SHORT-NAMEs to qualify an element. Usually, diagnostic code generation from ODX uses SHORT-NAMEs to generate e. g. variable names. Therefore, it is not allowed to use SHORT-NAMEs with a digit as first character.

Additionally, ODX allows setting an element's SHORT-NAME to a value which is completely unrelated to the value of the element's LONG-NAME. Oftentimes, this is unfavorable with regards to automated processing of the ODX data.

Therefore, SHORT-NAMEs should be deduced from the corresponding LONG-NAMEs as follows:

- Romanize LONG-NAME to restrict used character set of the SHORT-NAME to ASCII characters.
- Replace all characters different to [a-z A-Z 0-9 _ ] with the character '_'
- Remove sequences of character '_' by a single '_' character

As specified in [ISO 22901-1] the length of a SHORT-NAME is limited to 128 characters.

Implementation requirements:

[Rule] A SHORT-NAME must not have a digit as first character.

[Reco] The SHORT-NAME should be deduced from the LONG-NAME of an element.

#### 3.2.4.1.2 Building Rules for Specific Elements

For certain elements, Renault / Nissan require that SHORT-NAMEs are constructed following a very specific scheme. This includes some elements of the following categories:

- TABLEs
- TABELE-ROWs
- STRUCTUREs
- PARAMs

Note: Not all elements of the above-mentioned categories require special SHORT-NAMEs. Whether a specific naming scheme has to be actually applied for a certain element, depends on where the according element is defined and in what context it is used (e. g. which DIAG-SERVICE references a certain TABLE, what TABLE contains a certain TABLE-ROW etc.).

The specific rules for those elements are defined in the according sections of chapters 3.3.4 and 3.3.5 and a summary of the specific rules is given in section 3.3.7.3. If no specific rule is explicitly defined for a certain element, the general rules and recommendations given in section 3.2.4.1.1 shall be applied.



Confidential C

#### 3.2.4.2 LONG-NAME

LONG-NAMEs are optional in ODX. This is unfortunate, seen that – among other things – diagnostic testers normally use the LONG-NAME for the textual representation of diagnostic content.

Therefore, the LONG-NAME is mandatory at Renault / Nissan for every ODX element having an ELEMENT-ID handle. In addition, it must not be empty and shall be unique in capital letters among the namespace of its ODX object.

Implementation requirements:

[Rule] The LONG-NAME element is mandatory for ODX elements with an ELEMENT-ID.

[Rule] LONG-NAMEs shall not be empty.

[Rule] All uppercase representations of all LONG-NAMEs inside the same namespace shall be unique within that namespace.

[Rule] The uppercase representation of an ODX PARAM's LONG-NAME shall either be unique amongst all uppercase PARAM LONG-NAME representations of the whole ODX model or all PARAMs having the same uppercase LONG-NAME representation shall either all reference the same DOP or DOPs which only differ in their byte orders. Exception are STRUCTUREs which model alternate representation of the very same data structures used by flat services (see rule below).

[Rule] In case a flat service is modelled which is related to an identifier such as a DID or RID etc. and the according data structure is also modelled via the regular TABLE (e. g. an alternate representation of a data record is modelled with a flat service while the original representation available via TABLE TA_S22 is still maintained) then the LONG-NAMEs of the ODX STRUCTUREs representing the alternate models of the very same data structures shall be the same (while the SHORT-NAMEs will of course differ according to the short naming rules defined in this document).

[Reco] LONG-NAMEs of DOPs should reflect the conversions / data formats modelled by that DOP and only that information; specifically, LONG-NAMEs of DOPs should not contain information specific to the actual data stored in the ECU or transmitted between testers and the ECU on which the conversion is applied. An exception to this is the naming of TEXTTABLEs which generally do contain data specific information as a matter of fact.

[Reco] in contrast to this, LONG-NAMEs of PARAMs should reflect the actual data stored in the ECU or transmitted between testers and the ECU which is represented by the PARAMs; LONG-NAMEs of PARAMs should not contain information specific to the structure of or the interpretation of or the conversion applied to the data they represent.

[Rule] The length of a LONG-NAME is limited to 255 characters.

#### 3.2.4.3 DESCRIPTION (DESC)

No restriction exists in Renault / Nissan ODX concerning the use of description elements. The XHTML subset supported by ODX inside of description elements may be used as the authors see fit. Authors however should be aware that descriptions at most elements will be lost when an ODX model is converted into DDT.

Implementation recommendations:

[Reco] For ODX models intended to be converted into DDT format, authors should avoid descriptions at elements other than TABLE-ROWs and PARAMs which directly correspond to DDT Data elements.



Confidential C

### 3.2.5 COMPANY-DATA

Except ESD layers, COMPANY-DATA shall not be used.

### 3.2.6 ADMIN-DATA

Implementation requirements:

[Rule] ADMIN-DATA shall be used and maintained, on DIAG-LAYER-CONTAINER level, at all files containing an ECU-SHARED-DATA, a PROTOCOL, or FUNCTIONAL-GROUP layer and in ODX-V files.

[Rule] ADMIN-DATA shall be used and maintained, on each DIAG-LAYER level, at file containing BASE-VARIANT and ECU-VARIANT.

[Rule] ADMIN-DATA may not be used at elements other than those previously describe

[Rule] All ADMIN-DATA element should have at least a REVISION-LABEL, STATE, DATE and TOOL elements.

[Rule] Only two revision states may be used: Officialised and Not-Officialised.

[Rule] For Alliance ECUs ESD/PROT DIAG-LAYER-CONTAINER level and FG/BV and EV DIAG-LAYER level, the value of <REVISION-LABEL> should be on w.x.y.z format with w.x.y the version of used AGL and z the version of the layer.



Confidential C

# 3.3 ODX-D

## 3.3.1 DIAG-LAYERs

### 3.3.1.1 Layer Hierarchy

Figure 1**Erreur ! Source du renvoi introuvable.**A top level ESD predefines the potential services and s tates and for each network potentially supported, there is a pair consisting of a protocol and functional group layer inheriting from that top level ESD.

Both the top-level ESDs and the deriving protocol layers are predefined by RFQ packages and intended to be reused as is in concrete ECU projects. One of the early results of those projects is the creation of a functional group layers and BASE-VARIANT for the ECU. The BASE-VARIANT inherits from all of the functional group layers associated with one of the networks actually supported by that ECU.

Both the layers predefined in RFQ packages and the ECU specific lower layers may (and are encouraged) to make use of the predefined Datas Format and the ASAM ODX-RS Unit Library whenever physical units are needed.



Confidential C

#### 3.3.1.2 ECU-SHARED-DATA

The table below defines the ECU-SHARED-DATAs and their content used in the context of Renault / Nissan ODX models.

| LONG- / SHORT-NAME | Defined by | Diagnostic Content |
|---|---|---|
| Alliance ECUs BC/ Alliance_ECUs_BC | RFQ Package | ► Predefined BC DIAG-SERVICEs.<br>► Session state model as STATE-CHART. |
| Alliance Datas Format / Alliance_Datas_Format | RFQ Package | ► Predefined DATA-OBJECT-PROPS |
| ODX-RS UNIT Library / ODX_RS_UNIT_LIB | ASAM | ► Predefined physical units. |

*Table 2 Predefined ECU-SHARED-DATA Layers*

Implementation requirements:

[Rule] ECU-SHARED-DATAs not listed in Table 2 must not be used in concrete ECU projects.

[Rule] Alliance ECUs BC ECU-SHARED-DATAs predefined by a RFQ package and reused in one ODX model must originate from the same RFQ package.

[Rule] Likewise, Alliance ECUs BC ECU-SHARED-DATAs originating from one RFQ package shall not be reused by protocol layers originating from another RFQ package.

[Rule] ECU designers and suppliers shall not edit the contents of ECU-SHARED-DATAs (in case changes are needed, Renault / Nissan diagnostic experts can provide needed updates).

[Rule] The XML-ID of the layers listed in Table 2 must encompass the version number of the DLC in which they are contained (except for the Datas Format and ODX-RS Unit Lib ESDs).

[Reco] Whenever possible, DOPs shall be reused from the Datas Format ESD.

[Reco] Whenever possible, physical units shall be reused from the ODX-RS Unit Library.



Confidential C

#### 3.3.1.3 PROTOCOL

The table below defines the PROTOCOLs together with the referenced COMPARAM-SPEC and the according PARENT-REF allowed in the context of Renault / Nissan ODX. They are predefined by a RFQ package in conjunction with the ECU-SHARED-DATAs they inherit from.

| LONG- / SHORT-NAME | PARENT-REF | COMPARAM-SPEC-REF |
|---|---|---|
| Alliance ECUs BC on CAN (11 bits)/ Alliance_ECUs_BC_on_CAN_11 bits | Alliance_ECUs_BC | ISO_15765_3_on_ISO_15765_2 |
| Alliance ECUs BC on CAN (29 bits)/ Alliance_ECUs_BC_on_CAN_29 bits | Alliance_ECUs_BC | ISO_15765_3_on_ISO_15765_2 |
| Alliance ECUs BC on DoIP / Alliance_ECUs_BC_on_DoIP | Alliance_ECUs_BC | ISO_14229_5_on_ISO_13400_2 |

*Table 3 Predefined PROTOCOL Layers*

Implementation requirements:

[Rule] PROTOCOL layers other than the ones listed in Table 3 must not be used.

[Rule] All protocol layers used in the context of one ODX model shall originate from the same RFQ package.

[Rule] Likewise, protocol layers originating from one RFQ package shall not inherit from an ECU-SHARED-DATA layer originating from another RFQ package and they shall not be reused by functional group layers originating from another RFQ package.

[Rule] The XML-ID of the layers listed in Table 3 must encompass the version number of the DLC in which they are contained.



Confidential C

#### 3.3.1.4 FUNCTIONAL-GROUP

The table below defines the FUNCTIONAL-GROUP layers together with the PARENT-REF allowed in the context of Renault / Nissan ODX. They are predefined by a RFQ package in conjunction with the PROTOCOL layers they inherit from.

| LONG- / SHORT-NAME | PARENT-REF |
|---|---|
| Function YYYY[1] *EcuName* Functional BC on CAN (11bit) / Function_YYYY_*EcuName*_Functional_BC_on_CAN_11bit | Alliance_ECUs_BC_on_CAN_11 bits |
| Function YYYY[1] *EcuName* Functional BC on CAN (29bit) / Function_YYYY_ *EcuName* _Functional_BC_on_CAN_29bit | Alliance_ECUs_BC_ on_CAN_29 bits |
| Function YYYY[1] *EcuName* Functional BC on DoIP / Function_YYYY_ *EcuName* _Functional_BC_on_DoIP | Alliance_ECUs_BC_on_DoIP |

*Table 4 Predefined FUNCTIONAL-GROUP Layers*

Implementation requirements:

[Rule] FUNCTIONAL-GROUP layers different to the ones listed in Table 4 must not be used.

[Rule] Likewise, protocol layers originating from one RFQ package shall not inherit from a protocol layer originating from another RFQ package.

[Rule] The XML-ID of the layers listed in Table 4 must encompass the version number of the DLC in which they are contained.

[1] The YYYY in the DIAG-LAYER short and long names given in Table 4 shall be replaced by the respective Function number, specifying the use case of the described ECU (e.g. Airbag, ABS, etc.)



Confidential C

### 3.3.1.5 BASE-VARIANT

BASE-VARIANTs store the ECU related common diagnostics of the normal function's application. Diagnostic content is both inherited from higher layers and defined locally.

Renault / Nissan ECU designers define the content of BASE-VARIANTs during initial ECU development. They inherit from one or more of the functional group layers defined in section 3.3.1.4. DIAG-SERVICEs are reused as predefined in the higher layers which originate from an RFQ package. BASE-VARIANTs in Renault / Nissan ODX do not contain local service definitions; exception to this is the optional use of so called flat services as described in section 0.

The typical content of a BASE-VARIANT encompasses:

- Definition of the actual session states and state transitions (cf. section 3.3.4.1)
- Definition of the actual security levels and level transitions (cf. section 3.3.4.70).
- Reuse of predefined DIDs and definition of ECU specific DIDs (cf. section 3.3.4.2).
- Reuse of predefined DIDs and definition of ECU specific LIDs (cf. section 3.3.4.3).
- Definition of I/O controls (cf. section 3.3.4.3).
- Devices, DTCs, snapshot and extended data records (cf. section 3.3.4.5.1).
- Routines (cf. section 3.3.4.6).
- Flat services (cf. section3.3.5.2.

Communication parameter related requirements are defined in section 3.4.

<u>Implementation requirements:</u>

[Rule] BASE-VARIANTs shall not contain local definitions of DIAG-SERVICEs, except for flat services as defined in section 3.3.5.2.

[Rule] They shall inherit from one or more of the functional group layers listed in section 3.3.1.4.

[Rule] When a BASE-VARIANT inherits from the RFQ layer, then at least one of the two available $22 DIAG-SERVICEs (ReadDataByIdentifier or ReadDataByIdentifer_MultiId) shall be marked as not inherited (depending on whether the described ECU supports reading out multiple DIDs at once or not).

[Rule] Each inherited or imported layer shall originate from the same RFQ package.

[Rule] If the described ECU provides identifier support check facilities and thus the according support check services are not explicitly marked as NOT-INHERITED, the ECU designers shall make sure that identifiers used for support check queries are not also described in the regular TABLEs of the according read, write, IO control and routine services (see section 3.3.4.11 for details on the different support check identifiers).

[Reco] The Datas Format ESD may be imported; if possible, DOPs should be reused from there.

[Reco] The ODX-RS Unit Library may be imported; if possible, units should be reused from there.



Confidential C

### 3.3.1.6 ECU-VARIANT

ECU-VARIANTs represent distinct phases in the evolution of an ECU's diagnostics. Diagnostic content is mainly intended to be inherited from the BASE-VARIANT but content may also be defined locally.

DIAG-SERVICEs are reused as predefined in the higher layers which originate from an RFQ package. ECU-VARIANTs in Renault / Nissan ODX usually do not contain local service definitions; exception to this is the optional use of so called flat services as described in section 3.3.5.2.

The typical content of an ECU-VARIANT corresponds to the contents listed in section 3.3.1.5 for BASE-VARIANTs with the difference that contents should mainly be reused from the parent BASE-VARIANT and possibly not defined locally.

#### 3.3.1.6.1 Evolution

During initial development, Renault / Nissan ECU designers define the diagnostic content of an ECU in the BASE-VARIANT. During this phase, a first ECU-VARIANT exists whose essential content is the auto idents of the described ECUs in the ECU-VARIANT-PATTERNs which correspond to versions of the ECU software which can all be diagnosed with the ECU-VARIANT at hand. During further evolution, additional auto idents should be added to that ECU-VARIANT as long as all implementation states represented by the auto idents can be correctly diagnosed with the ECU-VARIANT at hand.

Once an evolution of the diagnostic functionality of the described ECU necessitates the creation of a new ECU-VARIANT, diagnostic contents are maintained and described in that new ECU-VARIANT. This is essentially the case, when the mere addition of a new auto ident to the existing ECU-VARIANT (or a related change in its diagnostic contents) would no longer allow to correctly diagnose one of the implementation states of the ECU represented by one of the auto idents in the ECU-VARIANT

#### 3.3.1.6.2 Auto Identification

Renault / Nissan make use of service ReadIdentification ($2180 / $2183) which is used for auto identification:

In Renault / Nissan ODX models, these services are represented explicitly by distinct DIAG-SERVICEs which are predefined in the ESDs distributed with RFQ packages; see sections **Erreur ! Source du renvoi i ntrouvable.** to **Erreur ! Source du renvoi introuvable.**.

Note that Renault ECUs and Nissan ECUs use different identifiers and / or elements of the according data records for identification. The ECU-VARIANT-PATTERNs of ECU-VARIANTs shall reference the dedicated DIAG-SERVICEs and the respective PARAMs depending on whether the model describes a Renault only or a Nissan only or a Renault / Nissan ECU.

In case of a Renault only ECU, an ECU-VARIANT shall contain exactly one ECU-VARIANT-PATTERN for each implementation state of the ECU diagnosable by that ECU-VARIANT. That pattern in turn shall encompass four MATCHING-PARAMETERs as defined by Table 5.

| Referenced DIAG-COMMs | Referenced PARAMs |
|---|---|
| Read Identification (80) | DiagnosticIdentificationCode<br>SupplierNumber<br>SoftwareNumber<br>EditionNumber |

*Table 5 Matching Parameters in ECU-VARIANT-PATTERNs of Renault ECUs*



Confidential C

In case of a Nissan only ECU, an ECU-VARIANT shall contain exactly one ECU-VARIANT-PATTERN for each implementation state of the ECU diagnosable by that ECU-VARIANT. That pattern in turn shall encompass one MATCHING-PARAMETER as defined by Table 6.

| Referenced DIAG-COMMs | Referenced PARAMs |
|---|---|
| Read Identification (83) | DiagnosticIdentificationCode |

*Table 6 Matching Parameters in ECU-VARIANT-PATTERNs of Nissan ECUs*

If an ECU-VARIANT describes a joint Renault / Nissan ECU, the ECU-VARIANT shall contain exactly two ECU-VARIANT-PATTERNs for each implementation state of the ECU diagnosable by that ECU-VARIANT, one ECU-VARIANT-PATTERN as defined by Table 5 and one as defined by Table 6.

Implementation Requirements:

[Rule] ECU-VARIANTs shall not contain local definitions of DIAG-SERVICEs, except for flat services as defined in section 3.3.5.2.

[Rule] Each inherited or imported layer shall originate from the same RFQ package.

[Rule] If the described ECU provides identifier support check facilities and thus the according support check services are not explicitly marked as NOT-INHERITED, the ECU designers shall make sure that identifiers used for support check queries are not also described in the regular TABLEs of the according read, write, IO control and routine services (see section 3.3.4.11 for details on the different support check identifiers).

[Rule] Renault / Nissan ODX models shall encompass as few ECU-VARIANTs as possible. If a new evolution state of an ECU needs to be described and the ECU-VARIANT at hand can be adapted accordingly in such a fashion that all previous evolution states can still be correctly diagnosed with it, ECU designers shall actually use that ECU-VARIANT for this purpose instead of creating a new ECU-VARIANT.

[Rule] ECU-VARIANTs describing a Renault only ECU shall contain exactly one ECU-VARIANT-PATTERN for each implementation state of the ECU diagnosable by that ECU-VARIANT as defined by Table 5.

[Rule] ECU-VARIANTs describing a Nissan only ECU shall contain exactly one ECU-VARIANT-PATTERN for each implementation state of the ECU diagnosable by that ECU-VARIANT as defined by Table 6.

[Rule] ECU-VARIANTs describing a joint Renault / Nissan ECU shall contain exactly two ECU-VARIANT-PATTERNs for each implementation state of the ECU diagnosable by that ECU-VARIANT, one as defined by Table 5 and one as defined by Table 6.

[Reco] The Datas Format ESD may be imported; if possible, DOPs should be reused from there.

[Reco] The ODX-RS Unit Library may be imported; if possible, units should be reused from there.

[Reco] An ECU-VARIANT should contain as little local diagnostic content descriptions as possible and inherit as much content as possible from the parent BASE-VARIANT.



Confidential C

### 3.3.2 DIAG-LAYER-CONTAINERs

ODX allows storing of one or more DIAG-LAYERs inside a DIAG-LAYER-CONTAINER. As every DIAG-LAYER-CONTAINER results in one ODX-D file, Renault / Nissan therefore introduces rules to manage DIAG-LAYER-CONTAINERs.

As indicated in Figure 1, Renault / Nissan ODX models store the DIAG-LAYERs which conceptually belong to a common use case (such as B/C diagnostics…) in several related types of DIAG-LAYER-CONTAINERs, resulting in distinct ODX files.

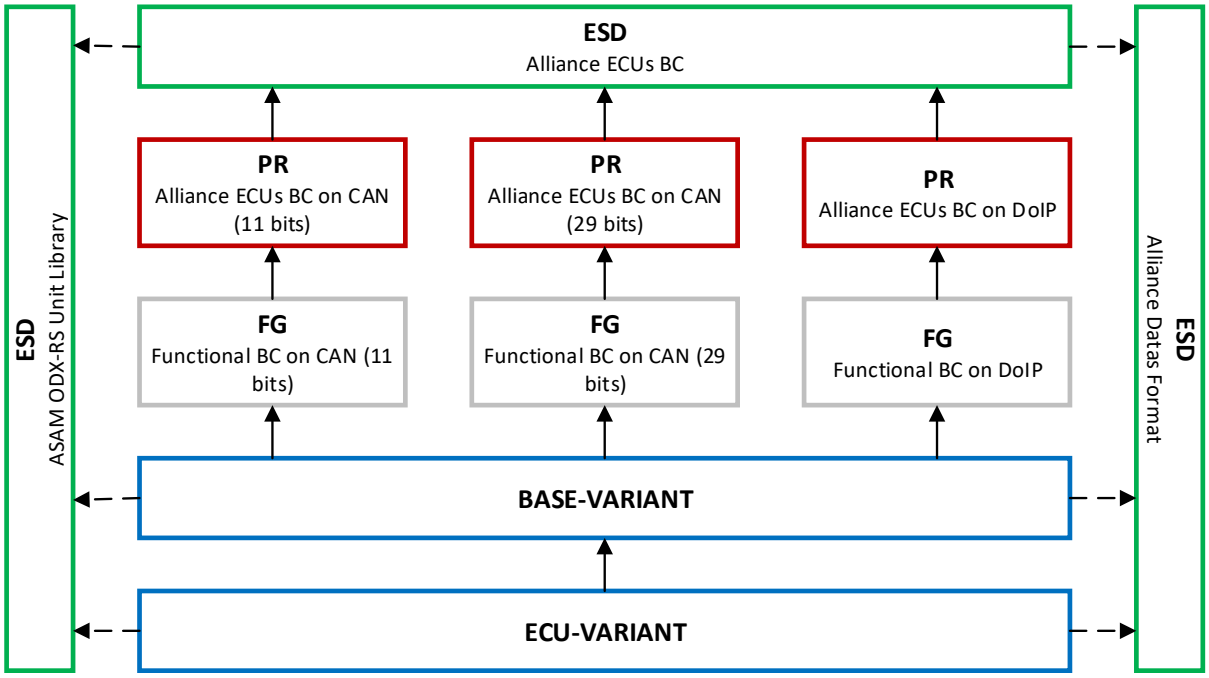


*Figure 1 DIAG-LAYER-CONTAINERs*

ODX descriptions for a concrete Renault / Nissan ECU encompass at least five DIAG-LAYER-CONTAINERs (and thus five ODX-D files):

- One DIAG-LAYER-CONTAINER (a RFQ DLC) containing the ECU-SHARED-DATA taken from an RFQ package corresponding to the Renault / Nissan diagnostic specification supported by the modelled ECU (e. g. Spec A, Spec B, Spec UDS…) and the available PROTOCOLs.
- One DIAG-LAYER-CONTAINER (a function DLC) containing the FUNCTIONAL-GROUPs that the modelled ECU can reuse; each FUNCTIONAL-GROUP layer references exactly one PROTOCOL.
- One DIAG-LAYER-CONTAINER created during ECU development encompassing base and ECU variant layers.
- The Datas Format ESD.
- The ASAM ODX-RS Unit Library

Note: Besides ODX-D files, the containers also encompass files of other types (such as ODX-C, -V…).



Confidential C

For Renault / Nissan ODX models, the following DIAG-LAYER-CONTAINERs are available for reuse:

| LONG- / SHORT-NAME | Contained DIAG-LAYERs |
|---|---|
| Alliance ECUs 02.1.0.x[2] / Alliance_ECUs_02_1_0_x[2] | Alliance_ECUs_BC<br>Alliance_ECUs_BC_on_CAN_11 bits<br>Alliance_ECUs_BC_on_CAN_29 bits<br>Alliance_ECUs_BC_on_DoIP |
| Renault Nissan Datas Format / RenaultNissan_DatasFormat | DatasFormat |
| ODX-RS UNIT Library / ODX_RS_UNIT_LIB_DLC | ODX_RS_UNIT_LIB |

*Table 7 Predefined DIAG-LAYER-CONTAINERs available for reuse*

Implementation requirements:

[Rule] The ODX model for one ECU must encompass at least five DIAG-LAYER-CONTAINERs: A RFQ DLC predefined by the RFQ package corresponding to the supported diagnostic specification, a function DLC (corresponding to the ECU function) containing all available FUNCT-GROUPs for the ECU, one DLC defined during ECU development containing all base and ECU variants, the DLCs containing the Datas Format ESD and the DLC containing the ASAM ODX-RS Unit Lib.

[Rule] The DIAG-LAYER-CONTAINERs which correspond to the Renault / Nissan diagnostic specifications supported by the ECU must have the respective names listed in Table 7.

[Rule] Except for functional group and base variant / ecu variant, the file name of the odx-d file which contains a DIAG-LAYER-CONTAINER shall equal the contained DIAG-LAYER-CONTAINER's SHORT-NAME.

[Rule] The file name of the odx-d file which contains DIAG-LAYER-CONTAINER for functional group shall equal to 0x*EcuFunctionAddress_EcuFunctionName – EcuName* (FunctionalGroup).

[Rule] The file name of the odx-d file which contains DIAG-LAYER-CONTAINER for base variant and ecu variants shall equal to 0x*EcuFunctionAddress_EcuFunctionName – EcuName*.

[Rule] The XML-ID of the DLCs listed in Table 7 must encompass their version number (exception: the DLCs containing the Datas Format ESD and the ODX-RS Unit Lib).

[Rule] It is not allowed to define DIAG-LAYER-CONTAINERs different to the ones above.

[2] 02 means BC based ECUs, 02.1.0 is this document version and x is for the associated ODX-D file version.



Confidential C

### 3.3.3 FUNCT-CLASS

For better structuring of DIAG-SERVICEs, the diagnostic use cases at Renault / Nissan are assigned to according FUNCT-CLASSes as given in Table 8:

| Use case | FUNCT-CLASS SHORT-NAME |
|---|---|
| Diagnostic Session Control | Session |
| Static LIDs | LIDs |
| Static DIDs | DIDs |
| I/O Controls | I_O_Controls |
| Fault Memory | Fault_Memory |
| Routine Control | Routine_Control |
| ECU Reset | ECUReset |
| Tester Present | TesterPresent |
| Control DTC Setting | ControlDTCSetting |
| Security Access | SecurityAccess |
| Upload Download | UploadDownload |
| Communication Control | CommunicationControl |
| Memory | Memory |
| Support Check | SupportCheck |
| Flat services | Specific |

*Table 8 Renault / Nissan FUNCT-CLASSes*

<u>Implementation requirements:</u>

[Rule] FUNCT-CLASSes different to those listed in Table 8 shall not be used.

[Rule] FUNCT-CLASSes shall only be specified inside the predefined Renault / Nissan diagnostic specification ESD listed in Table 2.



Confidential C

## 3.3.4 TABLEs

### 3.3.4.1 Diagnostic Sessions

Renault / Nissan ODX uses TABLE TA_S10 (Sessions) to specify the session types supported by an ECU. It is referenced dynamically by the DiagnosticSessionControl service ($10) predefined in the diagnostic specification ESDs which are part of Renault / Nissan RFQ packages.

The four session types defined by ISO B/C are thereby predefined by TABLE TA_S10 (Sessions) on ESD level. ECU designers are expected to override TABLE TA_S10 on variant level in order to specify different sets of session types for a concrete ECU.

The predefined session types can thereby be reused by using a TABLE-ROW-REF referencing the according table row from the ESD level. Other session types (e. g. supplier sessions) must be defined locally by introducing an according TABLE-ROW for that session in the overridden TABLE TA_S10 on variant level.

On ESD level, Renault / Nissan ODX also predefines a STATE-CHART defining all session types potentially supported by concrete ECUs together with all possible state transitions (cf. section 3.3.8).

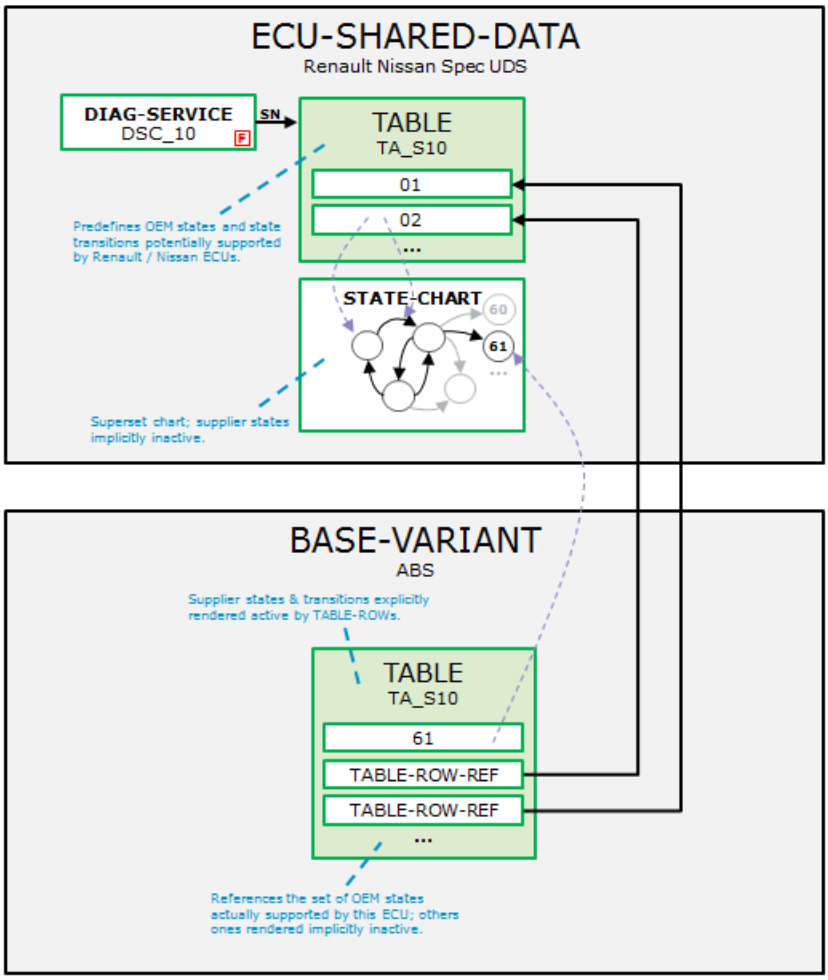


*Figure 2 Specification of Diagnostic Sessions with TABLE Sessions*



Confidential C

Implementation requirements:

[Rule] The diagnostic specification ESDs contained in Renault / Nissan RFQ packages shall encompass a TABLE with SHORT-NAME "TA_S10" ("Sessions") and one STATE-CHART of kind "SESSION" predefining all session types and state transitions potentially supported by a concrete ECU.

[Rule] That TABLE shall have the SHORT-NAME shall be "TA_S10" and LONG-NAME "Sessions".

[Rule] The DiagnosticSessionControl service ($10) shall reference that TABLE via SNREF.

[Rule] For ECUs which support different sets of session types and state transitions, TABLE Sessions shall be overridden on variant level.

[Rule] According state preconditions and state transitions of newly introduced TABLE-ROWs on variant level shall be reused from the STATE-CHART predefined on ESD level.



Confidential C

### 3.3.4.2 Static DIDs

As indicated in Figure 3, Renault / Nissan ODX uses two TABLEs to specify the static DIDs supported by an ECU: One TABLE for readable DIDs and one table for writable DIDs

TABLE TA_S2E (DIDs Writable) is thereby dynamically referenced by the WriteDataByIdentifier service ($2E) and TABLE TA_S22 (DIDs Readable) by the ReadDataByIdentifier service ($22). On level of the diagnostic specification ESDs contained in Renault / Nissan RFQ packages, all DIDs predefined in the RFQ package are also specified in the two TABLES by according TABEL-ROWs.

Each TABLE-ROW references a STRUCTURE which describes the content of the DID's data record and specifies the diagnostic session preconditions by referencing the according states from the STATE-CHART also contained in the diagnostic specification ESD.

TABLE-ROWs of DIDs which must be implemented by concrete ECUs are thereby marked as mandatory. Likewise, DIDs whose data records must be implemented identically in all ECUs are marked as final at the according TABLE-ROW.

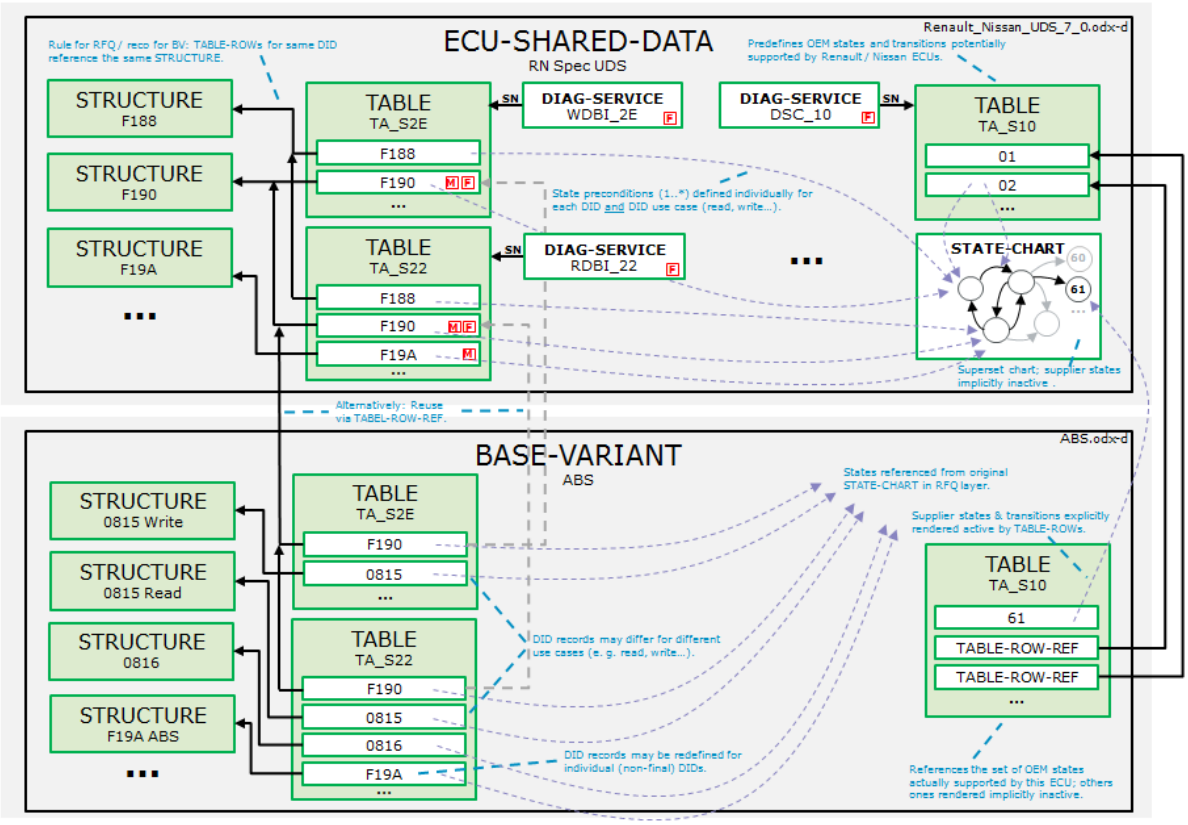


*Figure 3 Specification of Static DIDs with TABLEs DIDs_Readable and DIDs_Writable*

ECU Designers are expected to override the two TABLEs TA_S22 and TA_S2E at variant level. For DIDs predefined by the RFQ package, ECU designers have the choice to either reuse them by an according TABLE-ROW-REF referencing the original TABLE-ROW on ESD level or to introduce a new TABLE-ROW.

ECU specific DIDs or RFQ DIDs whose data record is different than specified at ESD level must be defined at BASE-VARIANT level by introducing a new TABLE-ROW in the overridden DID TABLEs. Diagnostic session preconditions shall thereby be specified by referencing the according states from the STATE-CHART predefined in the diagnostic specification ESD.



Confidential C

Implementation requirements:

[Rule] The diagnostic specification ESDs contained in Renault / Nissan RFQ packages shall encompass two TABLEs: “DIDs Readable” and “DIDs Writable”.

[Rule] The TABLE for readable DIDs shall have the SHORT-NAME “TA_S22” and TABLE for writable DIDs “TA_S2E”.

[Rule] The TABLE for readable DIDs shall have the LONG-NAME “DIDs Readable” and TABLE for writable DIDs “DIDs Writable”.

[Rule] The SHORT-NAMEs of the TABLE-ROWs in TABLE “TA_S22” and in TABLE “TA_S2E” as well as the SHORT-NAMEs of the STRUCTUREs referenced by those TABLE-ROWs and the SHORT-NAMEs of the PARAMs in those STRUCTUREs shall follow the respective rules specified in section 3.3.7.3.

[Rule] The ReadDataByIdentifier ($22) and WriteDataByIdentifier ($2E) services shall reference those TABLEs via SNREF.

[Rule] The two DID TABLEs shall be overridden on variant level.

[Rule] They shall contain entries for all readable and writable DIDs implemented by the ECU.

[Rule] DIDs marked as mandatory on ESD level must have an according entry in the overridden TABLEs at variant level.

[Rule] Diagnostic session preconditions shall be specified by referencing the according states from the STATE-CHART predefined in the diagnostic specification ESD.

[Rule] The DID data records shall be specified by STRUCTUREs referenced from the according TABLE-ROWs in the DID TABLEs.

[Rule] The TABLEs TA_S22 and TA_S2E shall not contain entries for support check identifiers.



Confidential C

#### 3.3.4.3 Static LIDs

Renault / Nissan ODX handles static LIDs in a similar manner to DIDs as given in the chapter before. It uses two TABLEs to specify the static LIDs supported by an ECU: One TABLE for readable LIDs and one table for writable LIDs.

TABLE TA_S3B (LIDs Writable) is thereby dynamically referenced by the WriteDataByLocalIdentifier service ($3B) and TABLE TA_S21 (LIDs Readable) by the ReadDataByLocalIdentifier service ($21). On level of the diagnostic specification ESDs contained in Renault / Nissan RFQ packages, all LIDs predefined in the RFQ package are also specified in the two TABLES by according TABEL-ROWs.

Each TABLE-ROW references a STRUCTURE which describes the content of the LID's data record and specifies the diagnostic session preconditions by referencing the according states from the STATE-CHART also contained in the diagnostic specification ESD.

TABLE-ROWs of LIDs which must be implemented by concrete ECUs are thereby marked as mandatory. Likewise, LIDs whose data records must be implemented identically in all ECUs are marked as final at the according TABLE-ROW.

ECU Designers are expected to override the two TABLEs TA_S21 and TA_S3B at variant level. For LIDs predefined by the RFQ package, ECU designers have the choice to either reuse them by an according TABLE-ROW-REF referencing the original TABLE-ROW on ESD level or to introduce a new TABLE-ROW.

ECU specific LIDs or RFQ LIDs whose data record is different than specified at ESD level must be defined at BASE-VARIANT level by introducing a new TABLE-ROW in the overridden LID TABLEs. Diagnostic session preconditions shall thereby be specified by referencing the according states from the STATE-CHART predefined in the diagnostic specification ESD.

<u>Implementation requirements:</u>

[Rule] The diagnostic specification ESDs contained in Renault / Nissan RFQ packages shall encompass two TABLEs: "LIDs Readable" and "LIDs Writable".

[Rule] The TABLE for readable LIDs shall have the SHORT-NAME "TA_S21" and TABLE for writable LIDs "TA_S3B".

[Rule] The TABLE for readable LIDs shall have the LONG-NAME "LIDs Readable" and TABLE for writable LIDs "LIDs Writable".

[Rule] The SHORT-NAMEs of the TABLE-ROWs in TABLE "TA_S21" and in TABLE "TA_S3B" as well as the SHORT-NAMEs of the STRUCTUREs referenced by those TABLE-ROWs and the SHORT-NAMEs of the PARAMs in those STRUCTUREs shall follow the respective rules specified in section 3.3.7.3.

[Rule] The ReadDataByLocalIdentifier ($21) and WriteDataByLocalIdentifier ($3B) services shall reference those TABLEs via SNREF.

[Rule] The two LID TABLEs shall be overridden on variant level.

[Rule] They shall contain entries for all readable and writable LIDs implemented by the ECU.

[Rule] LIDs marked as mandatory on ESD level must have an according entry in the overridden TABLEs at variant level.

[Rule] Diagnostic session preconditions shall be specified by referencing the according states from the STATE-CHART predefined in the diagnostic specification ESD.

[Rule] The LID data records shall be specified by STRUCTUREs referenced from the according TABLE-ROWs in the LID TABLEs.

[Rule] The TABLEs TA_S21 and TA_S3B shall not contain entries for support check identifiers.



Confidential C

#### 3.3.4.4 I/O Controls

The I/O Control related diagnostic services ($30, $21) make use of several TABLEs related to:

- ▷ Permanent and/or temporary control
- ▷ Stopping an I/O Control
- ▷ Requesting I/O status

At Renault/Nissan, it is not mandatory for I/O Controls to support the diagnostic service $21 (ReadDataByLocalIdentifier). But, the positive response for all I/O controls is structured in the same way for all I/O Controls in all sub-functions. As a result, the positive responses of all $30 services simply reference one TABLE TA_S30_PR by a SHORT-NAME-REF to enable the interpretation of the positive response.

Renault/Nissan uses the following set of independent TABLEs in scope of I/O Controls:

- ► LIDs I/O Temporary Startable ("TA_S30_00")
  used for definition of request parameters on controlling temporary I/O
- ► LIDs I/O PermanentStartable ("TA_S30_20")
  used for definition of request parameters on controlling permanent I/O
- ► LIDs I/O Status Requestable ("TA_S30_01")
  used for definition of request parameters on requesting the I/O's status
- ► LIDs I/O Stoppable ("TA_S30_11")
  used for definition of request parameters on stopping an I/O
- ► LIDs I/O (Positive response) ("TA_S30_PR")
  used for additional response parameters in all I/O control "sub-functions", beside the ControlStatus ("Control in progress", "Control complete and OK", ...)

<u>Implementation requirements:</u>

[Rule] The diagnostic specification ESDs contained in Renault / Nissan RFQ packages shall encompass five TABLEs with the following SHORT-NAMEs: "TA_S30_00", "TA_S30_20", "TA_S30_01", "TA_S30_11" and "TA_S30_PR". As no "generic" I/O exist at Renault/Nissan, these TABLEs contain placeholder data at the RFQ level. The user must override them on BASE-/ECU-VARIANT level to specify which control parameters are supported for the different controllable I/Os.

[Rule] The author must define the session/security related state information at each TABLE-ROW of the four request related TABLEs "TA_S30_00", "TA_S30_20", "TA_S30_01" and "TA_S30_11".

[Rule] The SHORT-NAMEs of the TABLE-ROWs in TABLEs "TA_S30_00", "TA_S30_20", "TA_S30_01", "TA_S30_11" and "TA_S30_PR" as well as the SHORT-NAMEs of the STRUCTUREs referenced by those TABLE-ROWs and the SHORT-NAMEs of the PARAMs in those STRUCTUREs shall follow the respective rules specified in section 3.3.7.3



Confidential C

### 3.3.4.5 Fault Memory Tables

The fault memory related services (such as $1902 and $1904 and the different OBD modes) make use of different TABLEs and TEXTTABLEs (and other ODX elements) in order to define an ECU's:

- Devices and failure types
- Valid combination of the latter two (representing the actual DTCs)
- OBD trouble codes
- Snapshot record numbers, snapshot records and the DIDs they are composed of
- Links between the snapshots and actual DTCs stored for them

They are defined at the RFQ layer (with placeholder data) and intended to be overridden at the variant layer. Figure 4 and Figure 5 provide a conceptual overview of these overridden constructs (with some exemplary sample data).

Note: Although not all of the ODX elements shown in these figures are ODX TABLEs (actually only the definitions of the DIDs making up individual snapshot records are based on ODX TABLEs), this section nonetheless explains all of the constructs to provide a full overview of the whole context.

#### 3.3.4.5.1 DTC Definition

In order to define DTCs, Renault / Nissan ODX makes use of four different ODX elements:

- One TEXTTABLE "FailureTypes" yielding the failure types for which DTCs might be stored.
- One DTC-DOP "Devices" representing the devices inside the ECU for which DTCs might be stored.
- One DTC-DOP "ObdDtcRecord" yielding all supported OBD fault codes which might be stored.
- One DTC-DOP "DtcRecord" which defines the valid combinations of Devices, OBD Trouble Codes and Failure Types, yielding the actual three byte DTCs stored by the described ECU and reported by e. g. the service $19.

Actually, at Renault / Nissan, the base DTC numbers of non-OBD DTCs always correspond to one of the device numbers defined by the DTC-DOP "Devices"; thus, a DTC is always implicitly related to certain device.

Likewise, the failure type bytes of the stored DTCs always correspond to one of the failure types defined by the TEXTTABLE "FailureTypes".

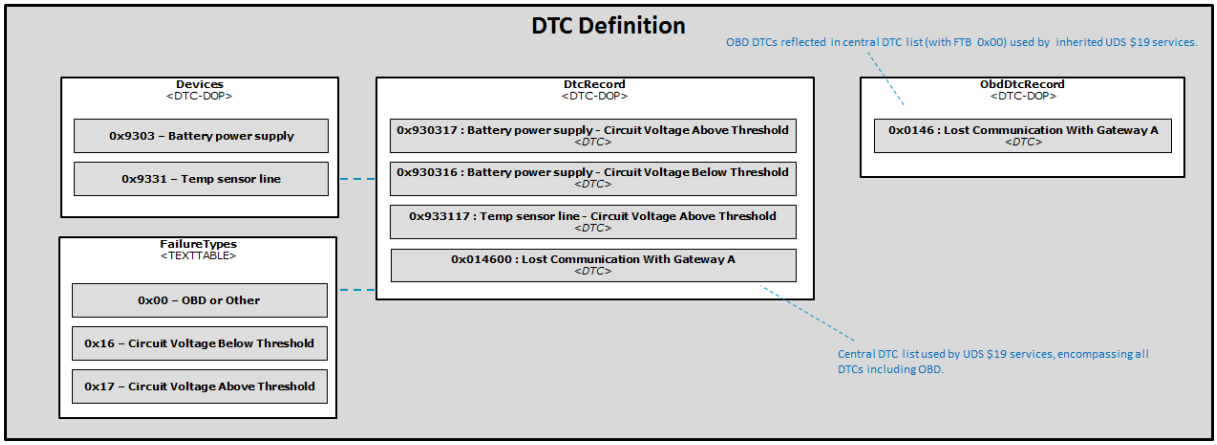


*Figure 4 DTC, Device and Failure Type Tables*

For OBD DTCs, the base DTC number corresponds to the according OBD trouble code in DTC-DOP "ObdDtcRecord" and the failure type byte is always 0x00.



Confidential C

The DTC-DOP "DtcRecord" is actually referenced by SHORT-NAME by the different sub functions of service $19. It encompasses all OBD and non-OBD DTCs which can be stored by the described ECU. The DTC-DOPs "Devices", "ObdDtcRecord" and "DtcRecord" are required to be overridden on BASE-VARIANT level to define the actual Devices, OBD and non-OBD DTCs of the respective ECU. The TEXTTABLE "FailureTypes" may be overridden on variant level to define the actual failure types supported by the respective ECU, but it is not required to do so.

Implementation requirements:

[Rule] On RFQ level, Renault / Nissan ODX models define the following four elements for the definition of DTCs: A TEXTTABLE with SHORT-NAME "FailureTypes", a DTC-DOP with SHORT-NAME "Devices", a DTC-DOP with SHORT-NAME "ObdDtcRecord" and a DTC-DOP with SHORT-NAME "DtcRecord".

[Rule] All three of the DTC-DOPs must be overridden on variant level, defining the actual DTCs implemented by the described ECU.

[Rule] The TEXTTABLE "FailureTypes" shall contain FailureTypes according to ISO15031-6 on the RFQ level. It may be overridden on variant level, but it is not required to do so.

[Rule] For each DTC defined in the DTC-DOP with SHORT-NAME "DtcRecord", there must be a corresponding DTC in the DTC-DOP with SHORT-NAME "Devices" whose TROUBLE-CODE value corresponds to the base DTC number (that is: the first two bytes of the TROUBLE-CODE) of the DTC in the DTC-DOP "DtcRecord".

[Rule] For each DTC defined in the DTC-DOP "DtcRecord", there must be a corresponding entry in the TEXTTABLE with SHORT-NAME "FailureTypes" whose value corresponds to the failure type byte (that is: the last byte of the TROUBLE-CODE) of the DTC in the DTC-DOP "DtcRecord".

[Rule] For each DTC defined in the DTC-DOP "DtcRecord" the TEXT element shall be composed of the TEXT element of the corresponding DTC in the DTC-DOP "Devices" and the text of the corresponding entry in the TEXTTABLE "FailureTypes", separated by the character sequence " – " (blank+minus+blank), except for DTCs whose failure type byte equals 0x00; for the latter ones, the TEXT element shall be a copy of the TEXT element of the corresponding DTC in the DTC-DOP "Devices".

[Reco] In case of a DTC whose FTB equals 0x00, one should avoid specifying the failure type as part of the TEXT of the corresponding DTC in the DTC-DOP "Devices", if there are other DTCs with the same Device number and a non-zero FTB; on the other side, if there are no additional DTCs with the same Device number, then Renault / Nissan does recommend to actually define the type of failure as part of the TEXT of the corresponding DTC in the DTC-DOP "Devices".

[Rule] For each DTC defined in the DTC-DOP "ObdDtcRecord", there shall be a corresponding DTC in the DTC-DOP "DtcRecord" which satisfies the following three conditions:

- The base DTC number (that is: the first two bytes of the TROUBLE-CODE) shall be the same as the TROUBLE-CODE of the DTC in DTC-DOP "ObdDtcRecord".
- The failure type byte (that is: the last byte of the TROUBLE-CODE) shall be 0x00.
- The TEXT element shall exactly correspond to the TEXT element of the corresponding DTC in DTC-DOP "ObdDtcRecord".

[Rule] DTC-DOP "DtcRecord" shall not contain any entry which is not either reflected in the DTC-DOP "Devices" or the DTC-DOP "ObdDtcRecord" as defined by the preceding rules (for process partner DTCs, according entries in DTC-DOP "Devices" shall be created).

[Rule] Authors shall use the DISPLAY-TROUBLE-CODE element of DTCs to express the DTC in SAE notation.



Confidential C

#### 3.3.4.5.2 Snapshot Definition

In order to define snapshots, Renault / Nissan ODX makes at least use of three ODX elements:

- One ENV-DATA-DESC with SHORT-NAME "SnapshotRecordContents" used as enveloping parent element for the ENV-DATA elements representing the different kinds of snapshot records supported by the described ECU.
- One TEXTTABLE "DtcSnapshotRecordNumbersRQ" defining the different snapshot record numbers which may be specified in requests of service $1904.
- One TEXTTABLE "DtcSnapshotRecordNumbersPR" defining the different snapshot record numbers which may be returned by the ECU in the positive responses of service $1904.

Moreover, for each individual type of snapshot record supported by the described ECU at least one ENV-DATA element shall be defined on variant level representing the snapshot record. On RFQ level, one ENV-DATA element is defined representing an arbitrary snapshot record.

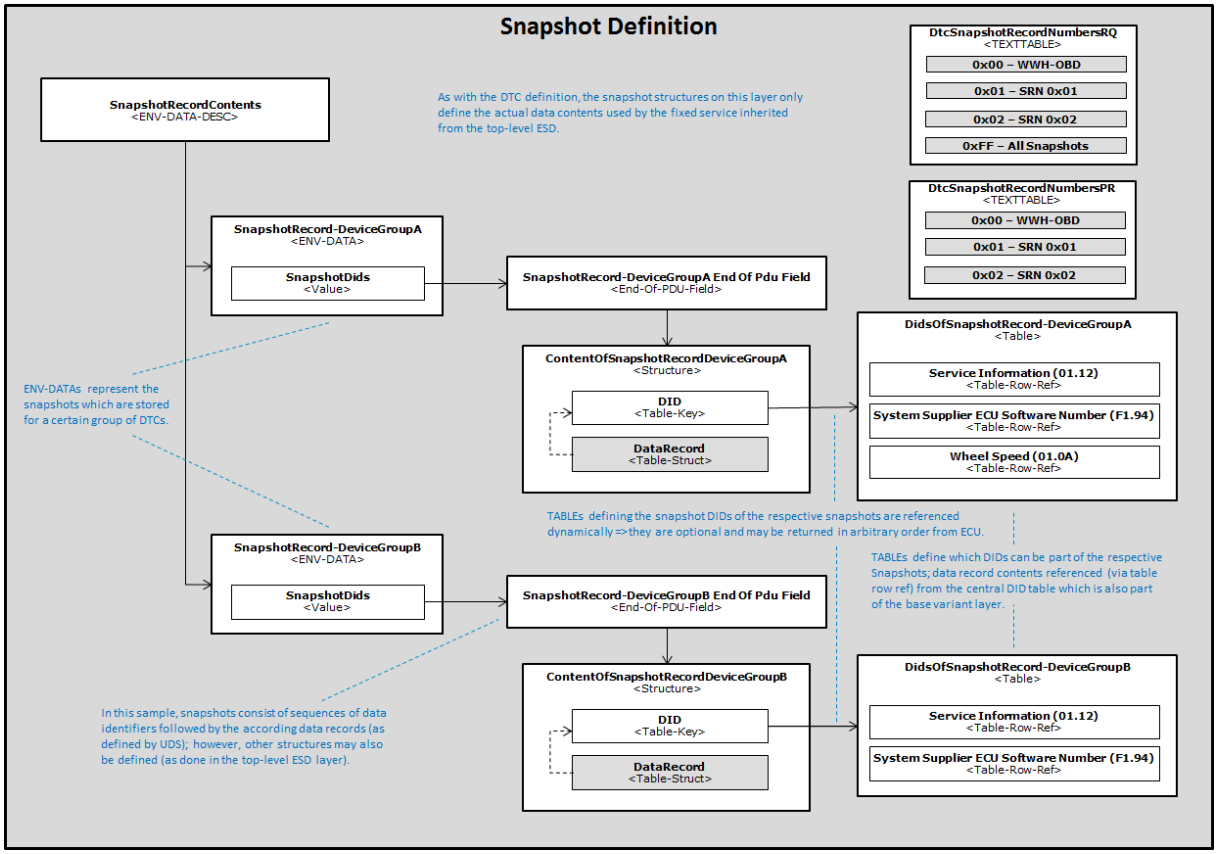


*Figure 5 Snapshot Tables*

It is **strongly** recommended to describe the contents of the individual snapshot records following the TABLE based approach as shown in Figure 5, where the individual DIDs which may be stored inside the respective snapshot records are defined by an according TABLE-ROW-REF referencing the according DID definition from TABLE "TA_S22".



Confidential C

Implementation requirements:

[Rule] On RFQ level, Renault / Nissan ODX models define the following four elements for the definition of snapshots: One TEXTTABLE with SHORT-NAME "DtcSnapshotRecord-NumbersRQ", one TEXTTABLE with SHORT-NAME "DtcSnapshotRecordNumbersPR", one ENV-DATA-DESC with SHORT-NAME "SnapshotRecordContents" and one ENV-DATA with SHORT-NAME "GenericEnvData".

[Rule] Except for the ENV-DATA "GenericEnvData", these elements shall be overridden on BASE-VARIANT level for defining the actual snapshot records stored by the described ECU.

[Rule] On BASE-VARIANT level the overridden TEXTTABLE "DtcSnapshotRecordNumbersRQ" shall contain entries for all possible snapshot record numbers which might be specified in requests of service $1904, including the number 0xFF used for requesting all snapshots and the number 0x00 for requesting only OBD relevant snapshots.

[Rule] Likewise, the overridden TEXTTABLE "DtcSnapshotRecordNumbersPR" shall contain entries for all possible snapshot record numbers which might be returned by the ECU in positive responses of service $1904.

[Rule] Except for the entry 0xFF in TEXTTABLE "DtcSnapshotRecordNumbersRQ", there must be a corresponding entry in TEXTTABLE "DtcSnapshotRecordNumbersPR" and all entries must match exactly the corresponding entries in TEXTTABLE "DtcSnapshotRecordNumbersPR".

[Rule] All ENV-DATAs referenced by the ENV-DATA-DESC "SnapshotRecordContents" overridden on BASE-VARIANT level shall be bound to one or more Devices or OBD Trouble Codes. That is: All DTC values specified for the ENV-DATA shall be two byte values for which an according entry exists either in the DTC-DOP "Devices" or in the DTC-DOP "ObdDtcRecord" or in both.

[Reco] Snapshot records should be defined as shown in Figure 5, that is: The ENV-DATA content consists of DYNAMIC-LENGTH-FIELD which represents the sequence of data identifiers immediately followed by the respective data records. By defining the individual DIDs which might appear in that sequence by dynamically referencing an ODX TABLE as shown in that figure, the ECU is not restricted to returning the DIDs in a certain order in the response of $1904 and all described DIDs may be returned optionally.



Confidential C

#### 3.3.4.5.3 Global Snapshot Record

In most ECUs, there are snapshot DIDs which must be supported by each and every snapshot record. At Renault / Nissan, these snapshot DIDs are called "global snapshot DIDs". The set of all global snapshot DIDs is called the "global snapshot" of an ECU. For such ECUs, the global snapshot shall be represented in the ODX data.

ECU designers must choose one of the following two approaches to represent the global snapshot:

- Add an ALL-VALUE ENV-DATA to the SnapshotRecordContents ENV-DATA-DESC.
- Use the optional element with SHORT-NAME "GlobalSnapshotRecord" to define the content of the global snapshot record.

The former solution shall be preferred, if possible: Prerequisite is that the described ECU actually returns global snapshot DIDs before any DTC-specific snapshot DIDs when snapshot records are queried (e. g. via service $1904).

For other ECUs, at RFQ level, a STRUCTURE or TABLE with the SHORT-NAME "GlobalSnapshotRecord" may be present. This specifies all common data which must be part of all snapshot records defined for an ECU on variant level.

It is recommended that this is done by using a TABLE defining DIDs via TABLE-ROW-REFs referencing the according data records from TABLE "TA_S22" so that they are eligible for overriding on variant level.

<u>Implementation requirements:</u>

[Rule] If global snapshot DIDs are defined for a particular ECU, then the global snapshot shall be represented in the ODX data describing that ECU.

[Rule] If the ECU returns global snapshot DIDs before any DTC specific snapshot DIDs upon query of snapshot records, the approach of using an ALL-VALUE ENV-DATA shall be followed.

[Reco] If modelled with an ALL-VALUE ENV-DATA, the global snapshot record should be defined like the snapshot records shown in Figure 5; that is: The ALL-VALUE ENV-DATA content consists of a single value referencing an END-OF-PDU-FIELD which represents a sequence of data identifiers immediately followed by the respective data records. By defining the individual DIDs which might appear in that sequence by dynamically referencing an ODX TABLE as shown in that figure, the ECU is not restricted to returning the DIDs in a certain order in the response of $1904 and all DIDs may be returned optionally.

[Rule] If the approach using an ALL-VALUE ENV-DATA cannot be followed, then the global snapshot shall be represented by using an element with the SHORT-NAME "GlobalSnapshotRecord".

[Rule] The element "GlobalSnapshotRecord" may be overridden on variant level. In that case, the element on variant level must at least contain all the contents which the according element contains in the RFQ layer.

[Reco] If used, the element with SHORT-NAME "GlobalSnapshotRecord" should be a TABLE consisting of TABLE-ROW-REFs referencing DID definitions from the TABLE "TA-S22".

[Rule] All contents defined by the element "GlobalSnapshotRecord" must also be defined within all snapshot records definitions on variant level.



Confidential C

#### 3.3.4.5.4 Extended Data Definition

At Renault/Nissan, all Extended Data Records are global (not DTC specific) and optional.

In order to define extended data records, Renault / Nissan ODX makes use of two elements:

- The TABLE with SHORT-NAME "ExtendedDataRecords", containing references to STRUCTUREs which define the actual contents of the extended data records.
- The TEXTTABLE with SHORT-NAME "ExtendedDataRecordsTableKeys" which is used as KEY-DOP for the TABLE mentioned above.

These two elements are predefined in the RFQ layer ESD. ECU designers are supposed to overwrite these elements on variant level to define the actual extended data records stored by the described ECU. All extended data records predefined on RFQ layer are optional.

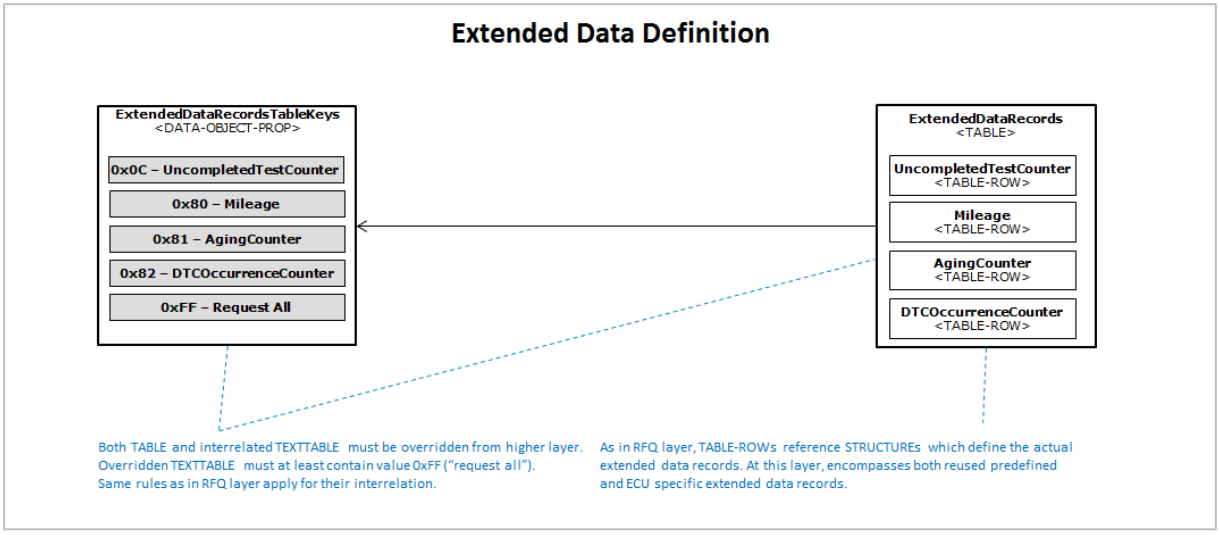


*Figure 6 Extended Data Record TABLE*

<u>Implementation requirements:</u>

[Rule] On RFQ level, Renault / Nissan ODX models define the following two elements for the definition of extended data records: One TABLE with SHORT-NAME "ExtendedData-Records" and one TEXTTABLE with SHORT-NAME "ExtendedDataRecordsTableKeys".

[Rule] Both of these elements shall be overridden on variant level for defining the actual extended data records stored by the described ECU.

[Rule] On variant level, the overridden TEXTTABLE "ExtendedDataRecordsTableKeys" shall contain entries for all possible extended data record numbers which might be contained in requests and positive responses of service $1906. It shall at least include the number 0xFF used for requesting all extended data records.

[Rule] Extended Data Records predefined in the RFQ level are optional, that is: it is not required to reuse them on variant level.

[Rule] For each entry in TEXTTABLE "ExtendedDataRecordsTableKeys", there must be a matching corresponding entry in TABLE "ExtendedDataRecords" and vice versa. Exception to this is the value 0xFF in the TEXTTABLE, which must not be contained in the TABLE.

[Rule] The TEXTTABLE "ExtendedDataRecordsTableKeys" shall be used as KEY-DOP of the TABLE "ExtendedDataRecords".



Confidential C

#### 3.3.4.6 Routines

Four TABLEs are used to specify the optional routine data records, routine optional response parameters and routine exit parameters of the different routines implemented in the described ECUs:

- The TABLE with SHORT-NAME "TA_S31_RQ" to define the routine data records used in the request of the "StartRoutineByLocalIdentifier" (service $31).
- The TABLE with SHORT-NAME "TA_S31_PR" to define the optional routine parameters (beside the routine entry status) used in the positive response of the "StartRoutineByLocalIdentifier" (service $31).
- The TABLE with SHORT-NAME "TA_S32_RQ" to define the routine exit parameters used in the request of the "StopRoutineByLocalIdentifier" (service $32).
- The TABLE with SHORT-NAME "TA_S32_PR" to define the optional routine exit parameters (beside the routine exit status) used in the positive response of the "StopRoutineByLocalIdentifier" (service $32).

These TABLEs are predefined on RFQ level (containing placeholder data) and must be overridden on BASE-VARIANT level to define the actual routine parameters of the described ECU.

Implementation requirements:

[Rule] The SHORT-NAME of TABLE "Routine - Start (Request)" referenced by the REQUEST of the DIAG-SERVICE with SHORT-NAME "StartRoutineByLocalIdentifier_Perform_routine_request" or with SHORT-NAME "StartRoutineByLocalIdentifier_Status_request" shall be "TA_S31_RQ".

[Rule] The SHORT-NAME of TABLE "Routine – Start (Positive response)" referenced by the POS_RESPONSE of the DIAG-SERVICE with SHORT-NAME "StartRoutineByLocalIdentifier_Perform_routine_request" or with SHORT-NAME "StartRoutineByLocalIdentifier_Status_request" shall be "TA_S31_PR".

[Rule] The SHORT-NAME of TABLE "Routine – Stop (Request)" referenced by the REQUEST of the DIAG-SERVICE with SHORT-NAME "StopRoutineByLocalIdentifier" shall be "TA_S32_RQ".

[Rule] The SHORT-NAME of TABLE "Routine – Stop (Positive response)" referenced by the POS-RESPONSE of the DIAG-SERVICE with SHORT-NAME "StopRoutineByLocalIdentifier" shall be "TA_S32_PR".

[Rule] If a routine identifier supports the service StartRoutineByLocalIdentifier, then an according TABLE-ROW must exist both in TABLE "TA_S31_RQ" and TABLE "TA_S31_PR" for the routine, even if no parameter reference is given (indicating that the according optional records are not used for the routine at hand in that subfunction's request or response).

[Rule] If a routine identifier supports the service StopRoutineByLocalIdentifier, then an according TABLE-ROW must exist both in TABLE "TA_S32_RQ" and TABLE "TA_S32_PR" for the routine, even if no parameter reference is given (indicating that the according optional records are not used for the routine at hand in that subfunction's request or response).

[Rule] The SHORT-NAMEs of the TABLE-ROWs in TABLEs "TA_S31_RQ", "TA_S31_PR", "TA_S32_RQ" and "TA_S32_PR" as well as the SHORT-NAMEs of the STRUCTUREs referenced by those TABLE-ROWs and the SHORT-NAMEs of the PARAMs in those STRUCTUREs shall follow the respective rules specified in section 3.3.7.3.



Confidential C

### 3.3.4.7 Security Access Levels

Renault / Nissan ODX uses the TABLEs with the SHORT_NAMEs "TA_S27_RS" ("SecurityAccess-requestSeed") and "TA-S27_SK" ("SecurityAccess-sendKey") to specify the security access levels supported by the described ECU. The TABLEs are referenced dynamically by the SecurityAccess services ($27) predefined in the diagnostic specification ESDs which are part of Renault / Nissan RFQ packages

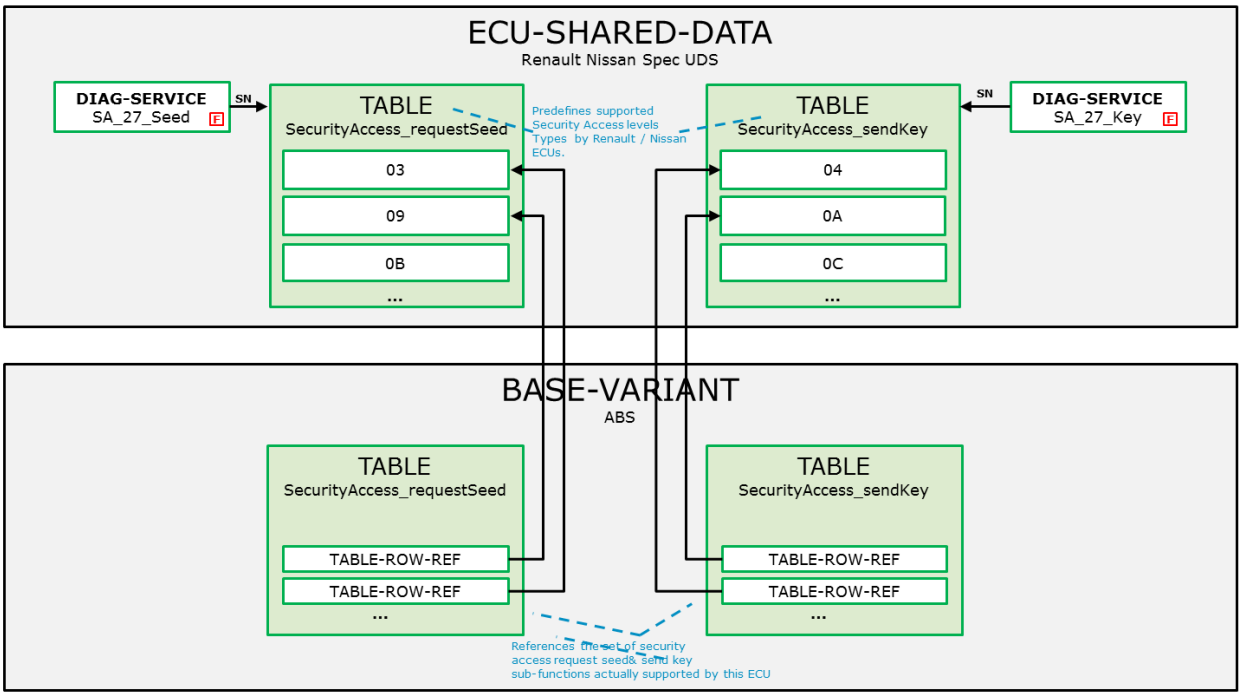


*Figure 7 Tables for security access levels*

The possible security models (encompassing the set of security access levels and the lengths of the seed and key parameters) are predefined per RFQ package. The services related to security access (request seed / send key) are predefined in the ESD and reference the TABLEs and the DOPs defining the seed and key lengths by SHORT-NAME-REF.

As a result, ECU designers are expected to override these TABLEs and DOPs at BASE-VARIANT level in order to specify different subsets of security access levels for a concrete ECU, but only as long as the overridden set is **in accordance with one of the security models predefined by Renault / Nissan**. Note that overriding on ECU-VARIANT level is not allowed in Renault / Nissan ODX.

The predefined security access related sub-functions can thereby be reused by simply creating a TABLE-ROW-REF referencing the according table row from the ESD level.

On ESD level, predefined STATE-CHARTs exist. Each TABLE-ROW of the TABLEs "TA_S27_RS" and "TA_S27_SK" must specify correct STATE-TRANSITION-/ and PRE-CONDITION-STATE-REFs targeting those STATE-CHARTs.

The seed and key lengths are predefined by the RFQ packages. They are independent from the security access levels inside the DIAG-SERVICEs (cf. section 3.3.5.14 for details on using and overriding seed and key definitions). Thus, the TABLE-ROWs of the TABLEs "TA_S27_RS" and "TA_S27_SK" must neither reference a STRUCTURE nor a DATA-OBJECT-PROP.



Confidential C

Implementation requirements:

[Rule] The diagnostic specification ESDs contained in Renault / Nissan RFQ packages shall encompass the TABLEs defining the supported SecurityAccess "request seed" and "send key" sub-functions.

[Rule] The SHORT-NAME of the TABLE which stores the request seed sub-functions shall be "TA_S27_RS".

[Rule] The TABLE storing the send key sub-functions shall have the SHORT-NAME "TA_S27_SK".

[Rule] TABLE-ROWs inside the two TABLEs "TA_S27_RS" and "TA_S27_SK" shall neither reference a STRUCTURE nor a DATA-OBJECT-PROP.

[Rule] The SecurityAccess services ($27) shall reference the TABLE "TA_S27_RS" or "TA_S27_SK" via SNREF.

[Rule] For ECUs which support different sets of security access levels, the two TABLEs "TA_S27_RS" and "TA_S27_SK" may be overridden at BASE-VARIANT level but must not be overridden at ECU-VARIANT level.

#### 3.3.4.8 ECU-Reset Types

Renault / Nissan ODX uses a TABLE with SHORT-NAME TA_S11 ("ResetTypes") to specify the ECU reset types supported by an ECU. It is referenced dynamically by the ECUReset service ($11) predefined in the diagnostic specification ESDs which are part of Renault / Nissan RFQ packages.

Three ECU reset types defined by ISO are thereby predefined by TABLE TA_S11 on ESD level. As indicated in Figure 8, ECU designers are expected to override TABLE TA_S11 on variant level in order to specify different sets of ECU reset types for a concrete ECU.

The predefined ECU reset types can thereby be reused by simply using a TABLE-ROW-REF referencing the according table row from the ESD level. Other ECU reset types are not allowed.

On ESD level, predefined STATE-CHARTs exist. Each TABLE-ROW of TABLE TA_S11 must specify correct STATE-TRANSITION-REFs into the default session and into the "locked state". The TABLE-ROWs must also specify the appropriate PRE-CONDITION-STATE-REFs.

As the reset services just request the reset type without any type depending parameters, the TABLE-ROWs of TABLE TA_S11 must neither reference a STRUCTURE nor a DATA-OBJECT-PROP.



Confidential C

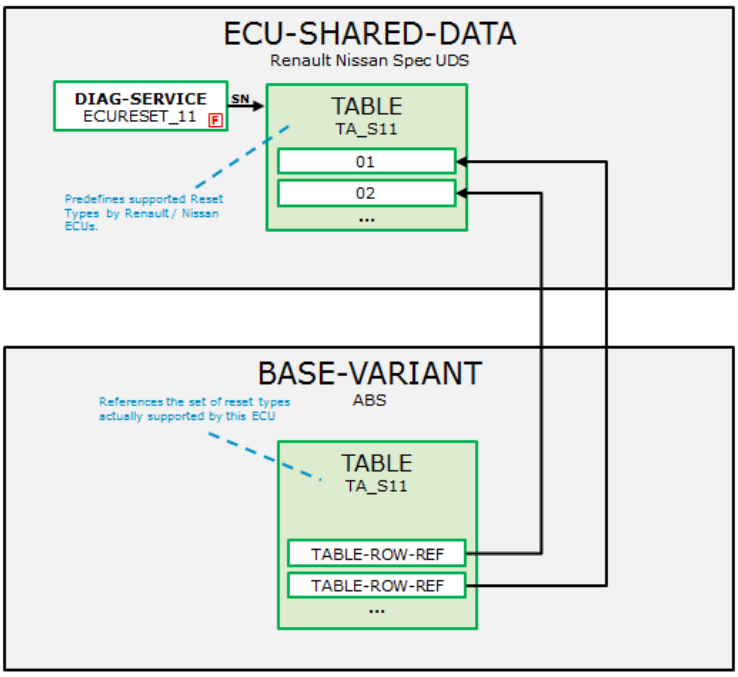


*Figure 8 Specification of ECU reset types with TABLE TA_S11*

<u>Implementation requirements:</u>

[Rule] The diagnostic specification ESDs contained in Renault / Nissan RFQ packages shall encompass a TABLE ResetTypes.

[Rule] That TABLE shall have the SHORT-NAME "TA_S11".

[Rule] TABLE-ROWs inside the TABLE "ResetTypes" shall neither reference a STRUCTURE nor a DATA-OBJECT-PROP.

[Rule] The EcuReset service ($11) shall reference that TABLE via SNREF.

[Rule] For ECUs which support different sets of reset types, the TABLE TA_S11 shall be overridden at variant level.



Confidential C

#### 3.3.4.9 DTC Setting Types

Renault / Nissan ODX uses TABLE "DTCSettingTypes" to specify the ControlDTCSetting types supported by an ECU. It is referenced dynamically by the ControlDTCSetting service ($85) predefined in the diagnostic specification ESDs which are part of Renault / Nissan RFQ packages.

Two setting types as defined by ISO are thereby predefined in by TABLE DTCSettingTypes on ESD level. The service to control the DTC setting which is predefined in the ESD references this TABLE by an ODX-LINK. As a result, ECU designers can't modify the TABLE DTCSettingTypes at BASE-VARIANT level.

On ESD level, predefined STATE-CHARTs exist. Each TABLE-ROW of TABLE DTCSettingTypes shall specify the appropriate PRE-CONDITION-STATE-REFs targeting those STATE-CHARTs.

As the control DTC setting services just requests an according setting type (on/off) without any type depending parameters, the TABLE-ROWs of TABLE DTCSettingTypes must neither reference a STRUCTURE nor a DATA-OBJECT-PROP.

<u>Implementation requirements:</u>

[Rule] The diagnostic specification ESDs contained in Renault / Nissan RFQ packages shall encompass a TABLE DTCSettingTypes.

[Rule] That TABLE shall have the SHORT- and LONG-NAME "DTCSettingTypes".

[Rule] TABLE-ROWs inside the TABLE "DTCSettingTypes" shall neither reference a STRUCTURE nor a DATA-OBJECT-PROP.

[Rule] The ControlDTCSetting service ($85) shall reference that TABLE via ODX-LINK.



Confidential C

#### 3.3.4.10 Communication Control Types

Renault / Nissan ODX uses the TABLE with SHORT-NAME TA_S28 ("CommunicationControlTypes") to specify the CommunicationControl types supported by an ECU. It is referenced dynamically by the CommunicationControl service ($28) predefined in the diagnostic specification ESDs which are part of Renault / Nissan RFQ packages.

The supported CommunicationControl types specify which sub-functions are available for the SERVICE "CommunicationControl" ($28). Since ECUs could support different sub-functions, ECU designers may modify the TABLE on variant level.

As the Communication Control services just request an according communication control type (sub-function identifier) without any type depending parameters, the TABLE-ROWs of TABLE CommunicationControlTypes must neither reference a STRUCTURE nor a DATA-OBJECT-PROP.

Implementation requirements:

[Rule] The diagnostic specification ESDs contained in Renault / Nissan RFQ packages shall encompass a TABLE CommunicationControlTypes.

[Rule] That TABLE shall have the SHORT-NAME "TA_S28".

[Rule] TABLE-ROWs inside the TABLE "TA_S28" shall neither reference a STRUCTURE nor a DATA-OBJECT-PROP.

[Rule] The CommunicationControl service ($28) shall reference that TABLE via SNREF.

[Rule] The TABLE may be overridden on variant level, but it is not required.

[Rule] The TABLE shall contain entries for all available sub-functions of the service "CommunicationControl" ($28).

[Rule] The TABLE shall use a 1-Byte HexDump DOP as its KEY-DOP.

#### 3.3.4.11 Support Check

The diagnostic specification ESDs distributed with Renault / Nissan RFQ packages predefine two TABLEs with SHORT-NAMEs "TS_SC_DID" ("DIDs Supportable") and "TA_SC_LID" ("LIDs Supportable") for the support check facilities.

Implementation requirements:

[Rule] The SHORT-NAME of the TABLE "DIDs Supportable" referenced by the support check DIAG-SERVICEs for two byte identifiers shall be "TS_SC_DID".

[Rule] The SHORT-NAME of the TABLE "LIDs Supportable" referenced by the support check DIAG-SERVICEs for one byte identifiers shall be "TS_SC_LID".

[Rule] Both the request and the positive response of the support check DIAG-SERVICEs shall reference TABLE "TA_SC_DID" or "TA_SC_LID" statically.

[Rule] The TABLEs "TA_SC_DID" and "TA_SC_LID" must not be overridden on variant layers.



Confidential C

## 3.3.5 DIAG-SERVICEs

### 3.3.5.1 General DIAG-SERVICE Requirements

In ODX, DIAG-SERVICEs may reference multiple FUNCT-CLASS objects. For Renault / Nissan use cases this might confuse the user. Therefore, except for flat services, DIAG-SERVICEs shall only reference a single FUNCT-CLASS.

Renault / Nissan does not want to deviate from the ISO definition of negative responses. As a result, one GLOBAL-NEGATIVE-RESPONSE is predefined which handles all services according to ISO. ODX authors shall not define a NEG-RESPONSE on DIAG-SERVICE level.

In ODX it is possible to modify communication parameters at DIAG-COMM level. In Renault / Nissan ODX, this feature shall not be used in order to reduce possible issues in tester and/or future diagnostic code generation.

In order to be fully compliant to ISO, it shall be possible to execute every DIAG-SERVICE both physically and functionally.

To express the ability of suppressing the positive response via setting the SPRMIB, authors shall not use the POS-RESPONSE-SUPPRESSABLE element, except for those services where its usage is explicitly allowed by this document.

<u>Implementation requirements:</u>

[Rule] DIAG-SERVICEs shall have exactly one reference to a FUNCT-CLASS (except for Flat services).

[Rule/xsd] DIAG-SERVICEs shall not reference a NEG-RESPONSE.

[Rule] ODX authors must not override communication parameters at DIAG-SERVICE level.

[Rule] ODX authors must not define ADDRESSING-MODE different to “FUNCTIONAL-OR-PHYSICAL” at DIAG-SERVICE level.

[Rule] Generally, ODX authors must not use the POS-RESPONSE-SUPPRESSABLE element at DIAG-SERVICEs (except for where its usage is explicitly allowed by these AGLs).



Confidential C

#### 3.3.5.2 Flat Services

The guiding philosophy at Renault / Nissan is to predefine and fix all service structures in the RFQ packages. ECU designers and suppliers should not have to bother themselves with defining service structures but should rather concentrate on defining diagnostic contents.

However, the RFQ packages do not predefine all services defined by the RFQ specs in all possible flavors (e. g. more strict session & security preconditions as allowed by the standard and defined on RFQ layer) and for all conceivable use cases (e. g. writing of a data record which should consist of four individually editable parameters in engineering but only of one single parameter for writing in plant because the data record is read in its entirety from a barcode there).

For this, in Renault / Nissan ODX models, ECU designers may define DIAG-SERVICEs describing such a service on variant layer, given that it complies to the structuring rules defined below. Such a DIAG-SERVICE is called a "flat service".

Thereby, the following rules apply:

[Rule] Flat services shall have at least a reference to the SPECIFIC FUNCT-CLASS

[Rule] Flat services shall have exactly one request and one positive response.

[Rule] Both the request and the positive response shall thereby consist of at most two PARAMs: The first one a CODED-CONST specifying the SID / SIDPR and the second a VALUE referencing a STRUCTURE representing the data transferred by the request / positive response.

[Rule] The SHORT-NAME of the STRUCTURE referenced by the flat service's request shall be "ST_FS{SID}_{#NNNN}_RQ", where {SID} shall be replaced by the referencing service's SID and {#NNNN} can be optional used and replaced to represent a sub function and / or identifier if several flat services for the same SID need to be defined.

[Rule] The SHORT-NAME of the STRUCTURE referenced by the flat service's positive response shall be "ST_FS{SID}_{#NNNN}_PR", where {SID} shall be replaced by the referencing service's SID and {#NNNN} can be optional used and replaced to represent a sub function and / or identifier if several flat services for the same SID need to be defined.

[Rule] The STRUCTUREs referenced by flat services shall consist of flat lists of CODED-CONSTs or VALUEs. The VALUEs may thereby only reference DATA-OBJECT-PROPs which are of type IDENTICAL, LINEAR or TEXTTABLE; they must not reference complex elements such as STRUCTURES or TABLES.

[Rule] ECU designers shall not define flat services with a service ID not covered by the diagnostic specification the described ECU is based on.

[Rule] Flat services shall have the same functional class as the corresponding service predefined by the RFQ package.

[Rule] In case a flat service is modelled which is related to an identifier such as a DID or RID etc. and the according data structure is also modelled via the regular TABLE (e. g. an alternate representation of a data record is modelled with a flat service while the original representation available via TABLE TA_S22 is still maintained) then the LONG-NAMEs of the ODX STRUCTUREs representing the alternate models of the very same data structures shall be the same (while the SHORT-NAMEs will of course differ according to the short naming rules defined in this document).



Confidential C

#### 3.3.5.3 DIAG-SERVICE Overview

The following table shows the based use cases together with their diagnostic services and possible FUNCT-CLASS.

| FUNCT-CLASS | Service |
|---|---|
| Session | $10 (DiagnosticSessionControl) |
| LIDs | $21 (ReadDataByLocalIdentifier) |
| | $3B (WriteDatByLocalIdentifier) |
| DIDs | $22 (ReadDataByIdentifier) |
| | $2E (WriteDataByIdentifier) |
| Fault Memory | $14 (ClearAllDiagnosticInformation) |
| | $19 (ReadDTCInformation) |
| I/O Controls | $2F (InputOutpuControlByIdentifier) |
| Routine Control | $31 (RoutineControl) |
| Support Check | $22 (SupportedReadableDIDs) |
| | $2E (SupportedWriteableDIDs) |
| | $2F (SupportedControlableDIDs) |
| | $31 (SupportedRoutineControlableDIDs) |
| ECUReset | $11 (ECUReset) |
| TesterPresent | $3E (TesterPresent) |
| ControlDTCSetting | $85 (ControlDTCSetting) |
| SecurityAccess | $27 (SecurityAccess) |
| Upload Download | $34 (RequestDownload) |
| | $35 (RequestUpload) |
| | $36 (TransferData) |
| | $37 (RequestTransferExit) |
| CommunicationControl | $28 (CommunicationControl) |
| Memory | $23 (ReadMemoryByAddress) |
| | $3D (WriteMemoryByAddress) |

*Table 9 Overview of DIAG-SERVICEs and their FUNCT-CLASSes*



Confidential C

### 3.3.5.4 DiagnosticSessionControl ($10)

Service $10 is predefined once in the ESD available from RFQ packages. It is marked final – ECU designers and suppliers shall not override or redefine this service in lower layers.

The service makes use of the predefined TABLE "Sessions" to specify the supported diagnostic session types. The following session types are thereby predefined:

- DefaultSession (0x81)
- ProgrammingSession (0x85)
- DevelopmentMode (0x86)
- ExtendedDiagnosticSession (0xC0)

ECU designers can override that TABLE to tailor these presets for ECUs which support a different set of session types. Please refer to section 3.3.4.1 for the exact tailoring rules.

Implementation requirements:

[Rule] The SHORT- and LONG-NAME of the DIAG-SERVICE shall be "StartDiagnosticSession".

[Rule] The SEMANTIC attribute of the DIAG-SERVICE shall be set to "SESSION"

[Rule] The DIAG-SERVICE shall not use the DIAGNOSTIC-CLASS attribute.

[Rule] It shall be marked as IS-FINAL="true".

[Rule] The DIAG-SERVICE shall reference the FUNCT-CLASS "Session".

[Rule] The request of the DIAG-SERVICE shall reference the TABLE "TA_S10" dynamically by SNREF.

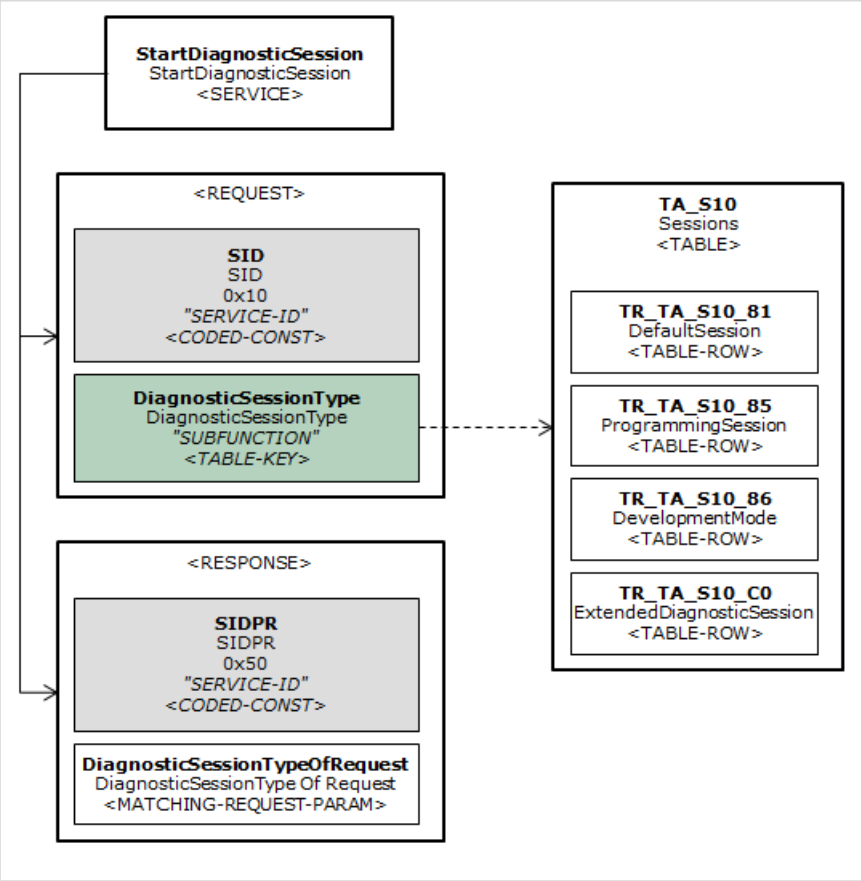


*Figure 9 Structure of DIAG-SERVICE StartDiagnosticSession (0x10)*



Confidential C

### 3.3.5.5 ReadDataByLocalIdentifier ($21)

#### 3.3.5.5.1 General Read Service

Service $21 is predefined in the ESD available from RFQ packages. The service is marked final – ECU designers and suppliers shall not override or redefine this service in lower layers.

The service makes use of the predefined TABLE "TA_S21" to specify both the local identifier(s) in request and response and the content of the associated data record(s). The TABLE in the ESD encompasses the set of readable LIDs predefined by the RFQ package (of which Figure 10 merely shows a small subset).

ECU designers can override TABLE "TA_S21" to tailor this predefined set of readable LIDs for ECUs which support a different set of LIDs. Please refer to to section 3.3.4.3 for detailed tailoring rules (and a general overview of how LIDs can be defined and reused in lower layers).

Implementation requirements:

[Rule] The SHORT- and LONG-NAME of the DIAG-SERVICE service $21 shall be "ReadDataByLocalIdentifier".

[Rule] The DIAG-SERVICEs shall be marked as IS-FINAL="true".

[Rule] The SEMANTIC attribute of the DIAG-SERVICEs shall be set to "STOREDDATAREAD".

[Rule] The DIAGNOSTIC-CLASS attribute shall not be used.

[Rule] The DIAG-SERVICEs shall reference the FUNCT-CLASS "LIDs".

[Rule] Both the request and the positive response of the DIAG-SERVICEs shall reference the TABLE "TA_S21" dynamically by SNREF.

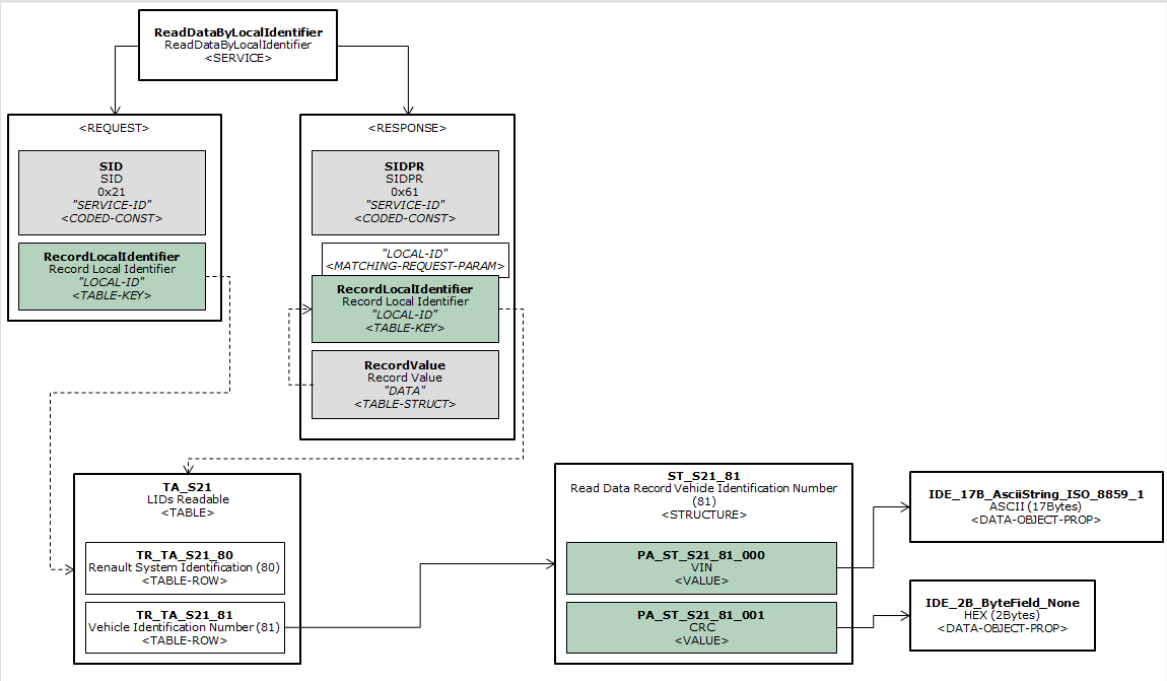


*Figure 10 Structure of DIAG-SERVICE ReadDataByLocalIdentifier ($21)*



Confidential C

#### 3.3.5.5.2 Support Check

For checking of supported readable one-byte LIDs, one DIAG-SERVICE "SupportedReadableLIDs" (using service $21) is predefined in the ESD available from RFQ packages.

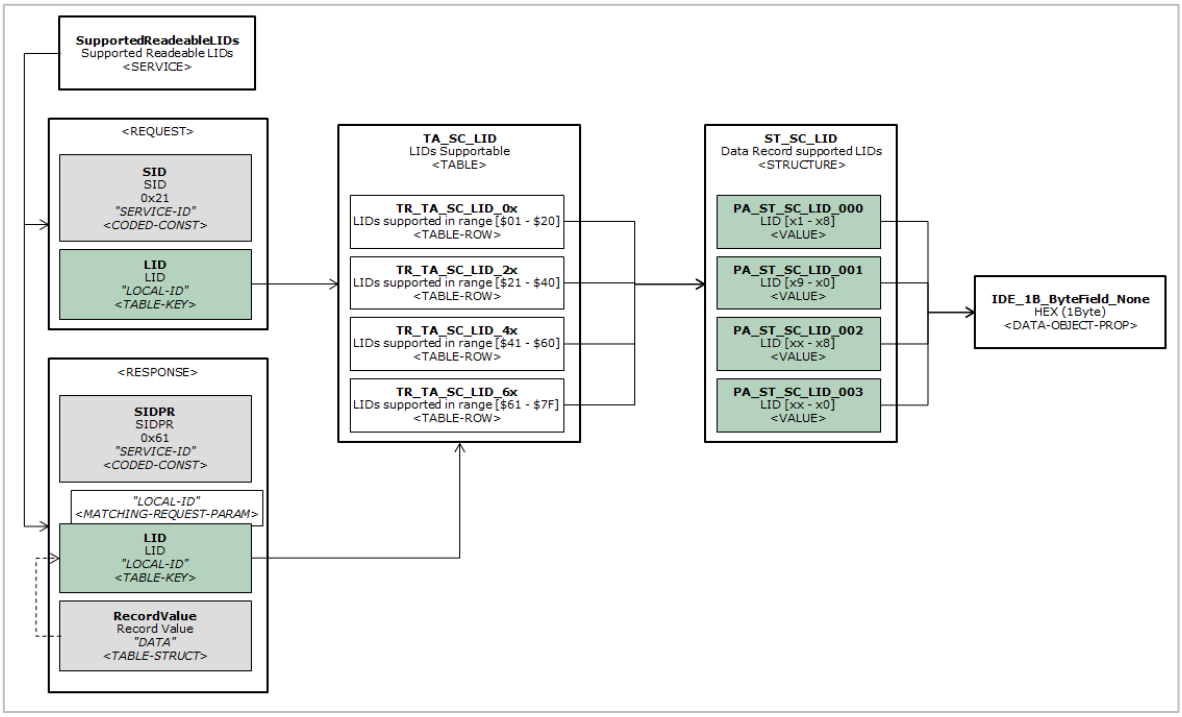


*Figure 11 Structure of DIAG-SERVICE SupportedReadableLIDs ($21)*

<u>Implementation requirements:</u>

[Rule] The SHORT- and LONG-NAME of the DIAG-SERVICE shall be "SupportedReadableLIDs".

[Rule] The DIAG-SERVICEs shall be marked as IS-FINAL="true".

[Rule] The SEMANTIC attribute of the DIAG-SERVICEs shall be set to "STOREDDATAREAD".

[Rule] The DIAGNOSTIC-CLASS attribute shall not be used.

[Rule] The DIAG-SERVICEs shall reference the FUNCT-CLASS "Support Check".

[Rule] Both the request and the positive response of the DIAG-SERVICEs shall reference the TABLE "TA_SC_LID" statically. The TABLE shall not be overridden on variant layers.

[Rule] The service shall be marked as NOT-INHERITED on variant layers if the support check is not implemented in the described ECU.



Confidential C

#### 3.3.5.5.3 Identification – Read Identification 80

For reading of Renault related ECU identification data, Renault uses the predefined LID $80. This LID provides access to information like "spare part number", "diagnostic identification code", "supplier number" and many more. Please refer to [2] for details to the service specification.

The ODX data uses this service $2180 also for identifying the ECU variant. For details of ECU variant identification, please refer to chapter 3.3.1.6.

The service $2180 is predefined once in the ESD available from RFQ packages. It is marked final – ECU designers and suppliers shall not override or redefine this service in lower layers.

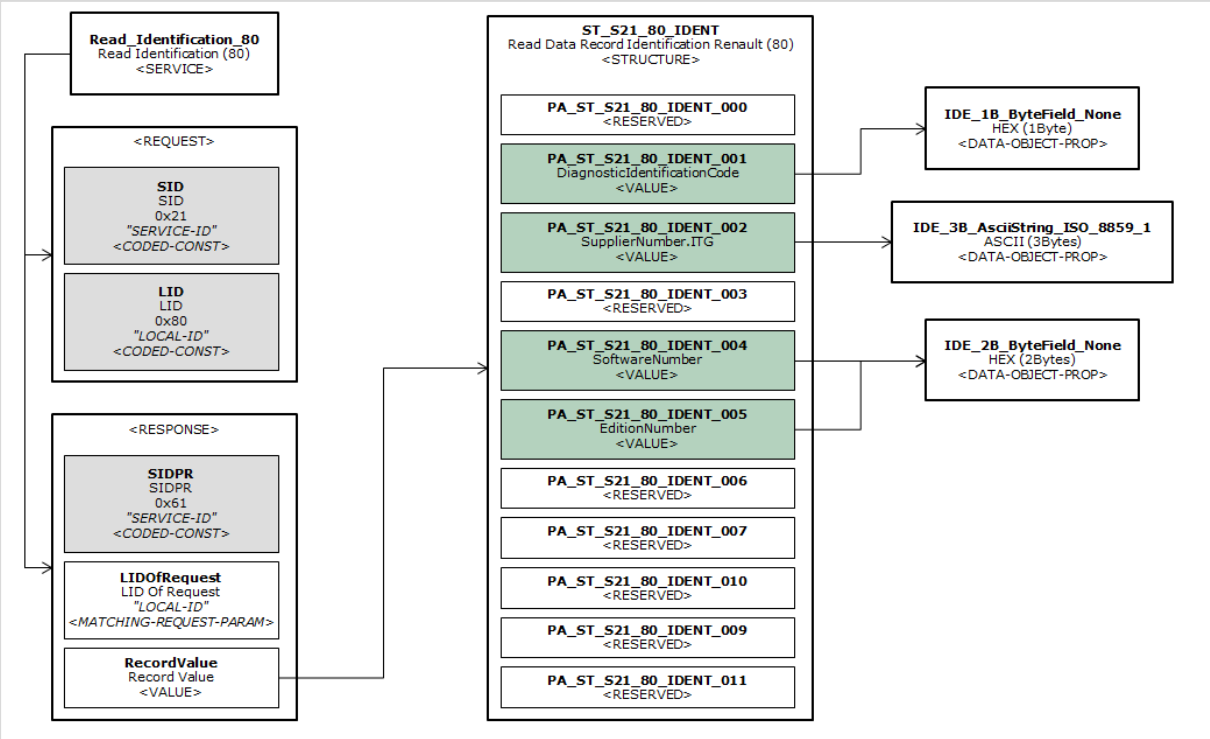


*Figure 12 Structure of DIAG-SERVICE Read_Identification_80 ($2180)*

<u>Implementation requirements:</u>

[Rule] The SHORT-NAME of the DIAG-SERVICE shall be "Read_Identification_80".

[Rule] The LONG-NAME of the DIAG-SERVICE shall be "Read Identification (80)".

[Rule] The DIAG-SERVICEs shall be marked as IS-FINAL="true".

[Rule] The SEMANTIC attribute of the DIAG-SERVICEs shall be set to "IDENTIFICATION".

[Rule] The DIAGNOSTIC-CLASS attribute shall be set to "VARIANTIDENTIFICATION".

[Rule] The DIAG-SERVICEs shall reference the FUNCT-CLASS "Identification".

[Rule] The positive response of the DIAG-SERVICE shall reference the STRUCTURE "ST_21_80_IDENT" (used for interpretation) by ODX-LINK.

[Rule] The author of ODX data shall not mark this service as "not inherited" on ECU-VARIANT-LAYER level.



Confidential C

#### 3.3.5.5.4 Identification – Read Identification 83

For reading of Nissan related ECU identification data, Nissan uses the predefined LID $83. This LID provides access to information like "spare part number", "diagnostic identification code", "supplier number" and many more. Please refer to [2] for details to the service specification.

The ODX data uses this service $2183 also for identifying the ECU variant. For details of ECU variant identification, please refer to chapter 3.3.1.6.

The service $2183 is predefined once in the ESD available from RFQ packages. It is marked final – ECU designers and suppliers shall not override or redefine this service in lower layers.

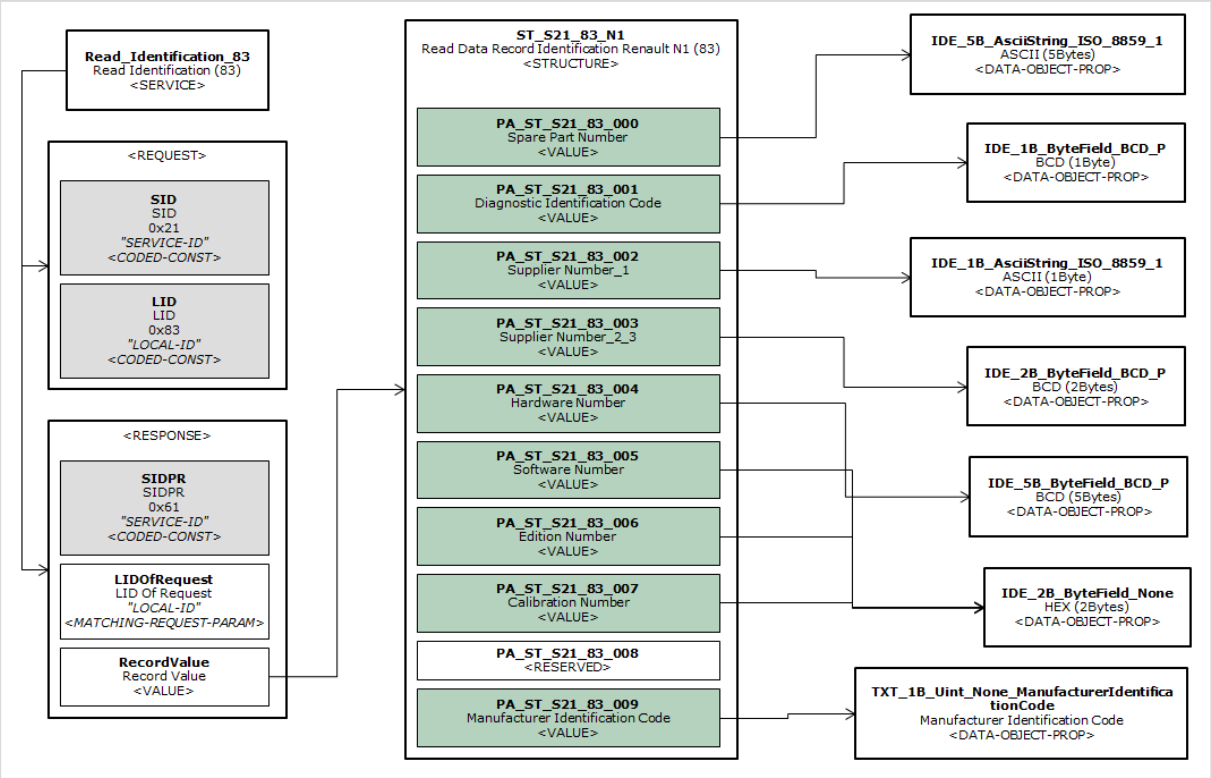


*Figure 13 Structure of DIAG-SERVICE Read_Identification_83 ($2183)*

<u>Implementation requirements:</u>

[Rule] The SHORT-NAME of the DIAG-SERVICE shall be "Read_Identification_83".

[Rule] The LONG-NAME of the DIAG-SERVICE shall be "Read Identification (83)".

[Rule] The DIAG-SERVICEs shall be marked as IS-FINAL="true".

[Rule] The SEMANTIC attribute of the DIAG-SERVICEs shall be set to "IDENTIFICATION".

[Rule] The DIAGNOSTIC-CLASS attribute shall be set to "VARIANTIDENTIFICATION".

[Rule] The DIAG-SERVICEs shall reference the FUNCT-CLASS "Identification".

[Rule] The positive response of the DIAG-SERVICE shall reference the STRUCTURE "ST_21_83_N1" (used for interpretation) by ODX-LINK.

[Rule] The author of ODX data shall not mark this service as "not inherited" on ECU-VARIANT-LAYER level.



Confidential C

### 3.3.5.6 ReadDataByIdentifier ($22)

Service $22 is predefined in the ESD available from RFQ packages. There are two definitions of $22, ReadDataByIdentifier and ReadDataByIdentifier_MultiId. The former is intended to be used when describing ECUs which only support reading out a single DID at a time, the latter when describing ECUs which support reading out multiple DIDs at once. Both are marked final – ECU designers and suppliers shall not override or redefine these services in lower layers.

Both services make use of the predefined TABLE "TA_S22" to specify both the data identifier(s) in request and response and the content of the associated data record(s). The TABLE in the ESD encompasses the set of readable DIDs predefined by the RFQ package (of which Figure 14 merely shows a small subset).

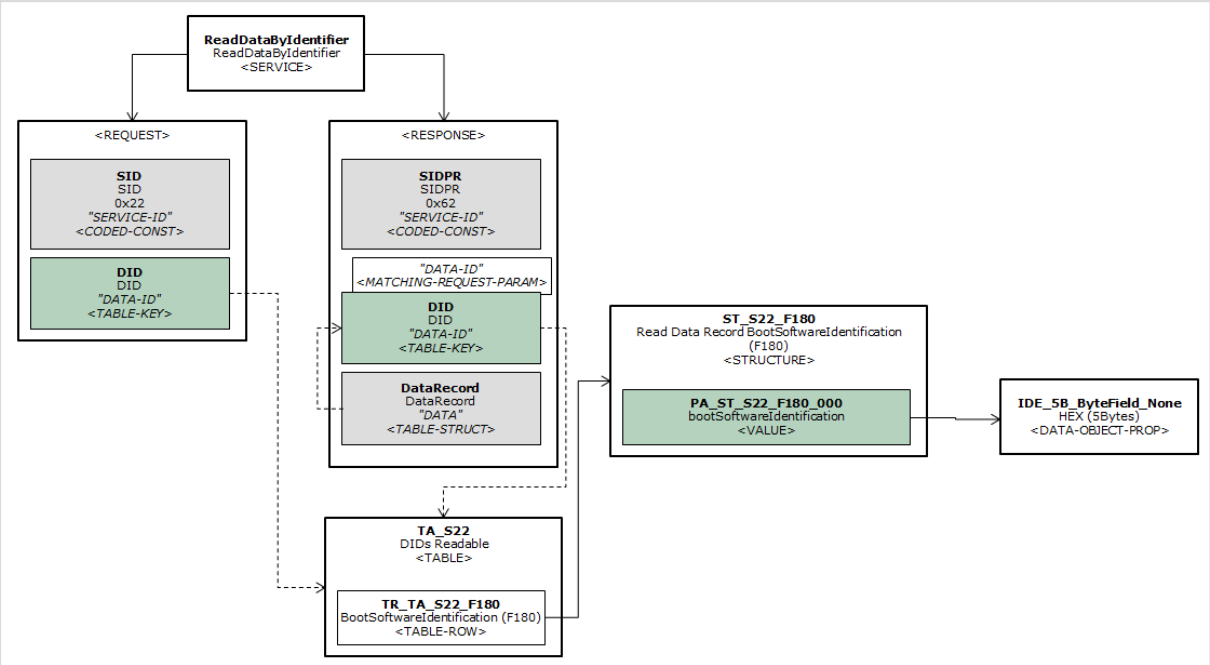


*Figure 14 Structure of DIAG-SERVICE ReadDataByIdentifier ($22)*



Confidential C

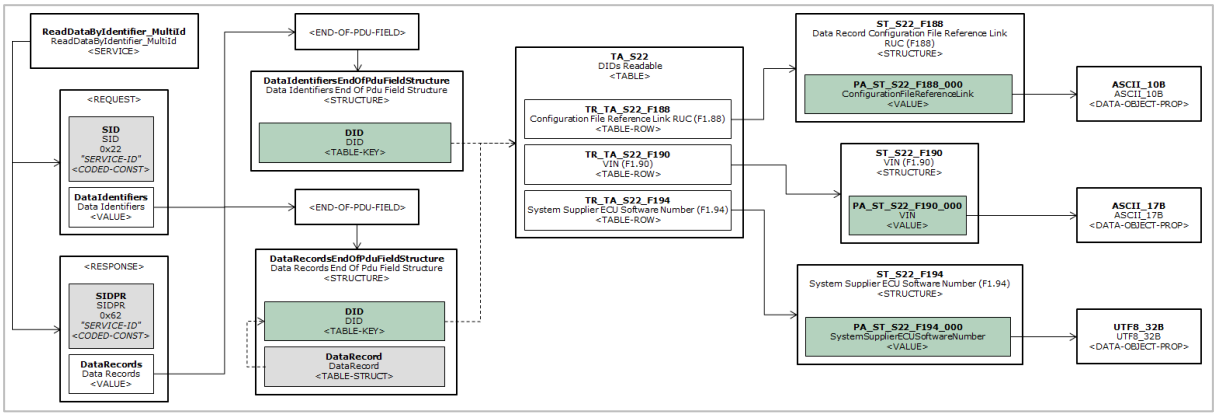


*Figure 15 Structure of DIAG-SERVICE ReadDataByIdentifier_MultiId ($22)*

ECU designers are allowed to override TABLE "TA_S22" to tailor this predefined set of readable DIDs for ECUs which support a different set of DIDs. Please refer to to section 3.3.4.2 for detailed tailoring rules (and a general overview of how DIDs can be defined and reused in lower layers).

<u>Implementation requirements:</u>

[Rule] The SHORT- and LONG_NAME of the two DIAG-SERVICEs representing service $22 shall be "ReadDataByIdentifier" and "ReadDataByIdentifier_MultiId".

[Rule] The DIAG-SERVICEs shall be marked as IS-FINAL="true".

[Rule] The SEMANTIC attribute of the DIAG-SERVICEs shall be set to "STOREDDATAREAD".

[Rule] The DIAGNOSTIC-CLASS attribute shall not be used.

[Rule] The DIAG-SERVICEs shall reference the FUNCT-CLASS "DIDs".

[Rule] Both the request and the positive response of the DIAG-SERVICEs shall reference the TABLE "TA_S22" dynamically by SNREF.



Confidential C

### 3.3.5.7 WriteDataByLocalIdentifier ($3B)

#### 3.3.5.7.1 General Write Service

Service $3B is predefined once in ESD available from RFQ packages. It is marked final – ECU designers and suppliers shall not override or redefine this service in lower layers.

The service makes use of the predefined TABLE "TA_S3B" to specify both the local identifier in request and response and the content of the associated data record. The TABLE in ESD encompasses the set of writable LIDs predefined by the RFQ package (of which Figure 16 merely shows a small subset).

ECU designers can override TABLE "TA_S3B" to tailor this predefined set of writable LIDs for ECUs which support a different set of LIDs. Please refer to to section 3.3.4.3 for detailed tailoring rules (and a general overview of how LIDs can be defined and reused in lower layers).

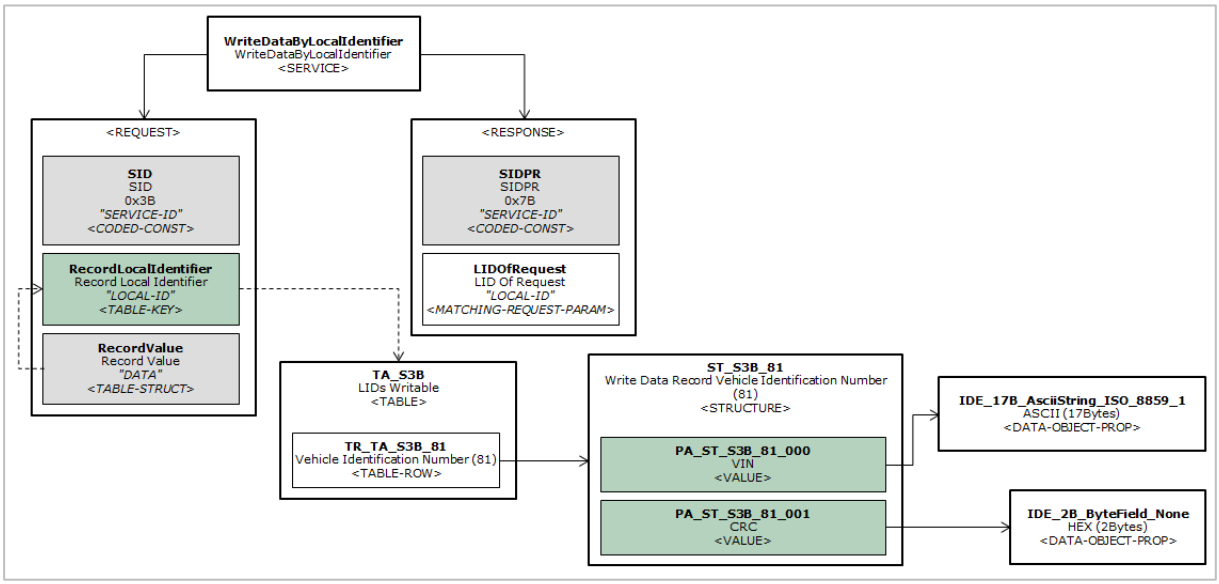


*Figure 16 Structure of DIAG-SERVICE WriteDataByLocalIdentifier ($3B)*

<u>Implementation requirements:</u>

[Rule] The SHORT- and LONG-NAME of the DIAG-SERVICE shall be "WriteDataByLocalIdentifier".

[Rule] The DIAG-SERVICE shall be marked as IS-FINAL="true".

[Rule] The SEMANTIC attribute of the DIAG-SERVICE shall be set to "STOREDDATAWRITE".

[Rule] The DIAGNOSTIC-CLASS attribute shall not be used.

[Rule] The DIAG-SERVICE shall reference the FUNCT-CLASS "LIDs".

[Rule] The request of the DIAG-SERVICE shall reference the TABLE "TA_S3B" dynamically by SNREF.



Confidential C

#### 3.3.5.7.2 Support Check

For checking of supported writeable one-byte LIDs, one DIAG-SERVICE "SupportedWriteableLIDs" (using service $3B) is predefined in ESD available from RFQ packages.

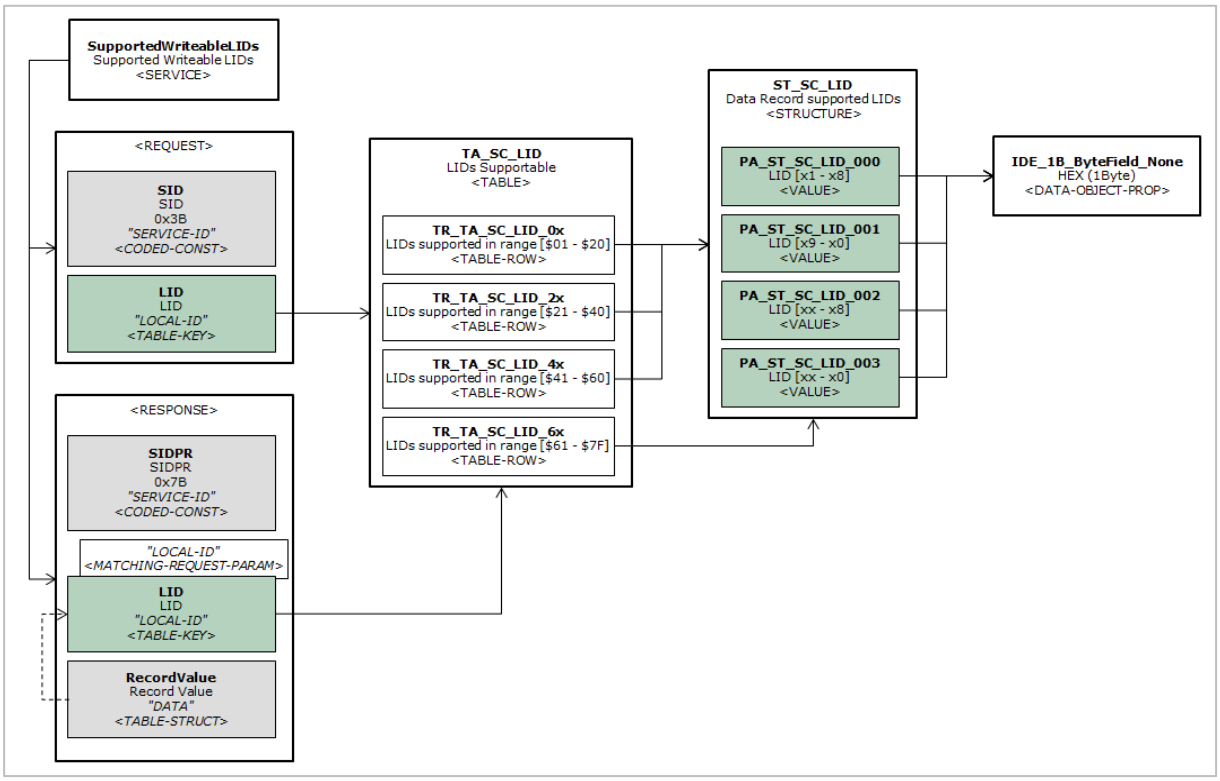


Figure 17 Structure of DIAG-SERVICE SupportedWritebleLIDs ($3B)

<u>Implementation requirements:</u>

[Rule] The SHORT- and LONG-NAME of the DIAG-SERVICE shall be "SupportedWriteableLIDs".

[Rule] The DIAG-SERVICEs shall be marked as IS-FINAL="true".

[Rule] The SEMANTIC attribute of the DIAG-SERVICEs shall be set to "STOREDDATAWRITE".

[Rule] The DIAGNOSTIC-CLASS attribute shall not be used.

[Rule] The DIAG-SERVICEs shall reference the FUNCT-CLASS "Support Check".

[Rule] Both the request and the positive response of the DIAG-SERVICEs shall reference the TABLE "TA_SC_LID" statically. The TABLE shall not be overridden on variant layers.

[Rule] The service shall be marked as NOT-INHERITED on variant layers if the support check is not implemented in the described ECU.



Confidential C

### 3.3.5.8 WriteDataByIdentifier ($2E)

Service $2E is predefined once in the ESD available from RFQ packages. It is marked final – ECU designers and suppliers shall not override or redefine this service in lower layers.

The service makes use of the predefined TABLE "DIDs_Writeable" to specify both the data identifier in request and response and the content of the associated data record. The TABLE in the ESD encompasses the set of writable DIDs predefined by the RFQ package (of which Figure 18 merely shows a small subset).

ECU designers are allowed to override TABLE "DIDs_Writeable" to tailor this predefined set of writable DIDs for ECUs which support a different set of DIDs. Please refer to to section 3.3.4.2 for detailed tailoring rules (and a general overview of how DIDs can be defined and reused in lower layers).

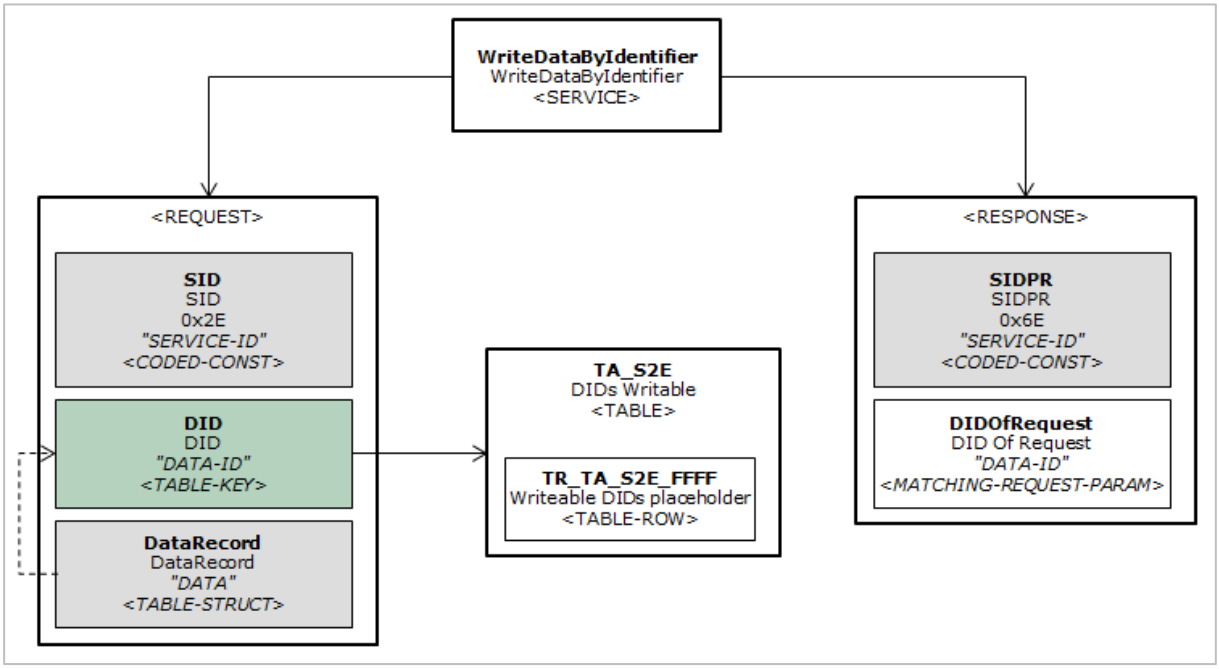


*Figure 18 Structure of DIAG-SERVICE WriteDataByIdentifier ($2E)*

<u>Implementation requirements:</u>

[Rule] The SHORT- and LONG_NAME of the DIAG-SERVICE shall be "WriteDataByIdentifier".

[Rule] The DIAG-SERVICE shall be marked as IS-FINAL="true".

[Rule] The SEMANTIC attribute of the DIAG-SERVICE shall be set to "STOREDDATAWRITE".

[Rule] The DIAGNOSTIC-CLASS attribute shall not be used.

[Rule] The DIAG-SERVICE shall reference the FUNCT-CLASS "DIDs".

[Rule] The request of the DIAG-SERVICE shall reference TABLE "TA_S2E" dynamically by SNREF.



Confidential C

### 3.3.5.9 InputOutputControlByLocalIdentifier ($30)

I/O Controls might support different ControlOptions, it is required to define each ControlOption with its own DIAG-SERVICE.

The following ControlOptions exits:

- Start Temporary Control ($00)
- Start Permanent Control ($20)
- Status Request ($01)
- Stop Control ($11)

The supplier specific affectation IO control parameters $FA to $FE defined by Renault / Nissan may be used but are not supported by the associated IO control TABLE structures predefined in the ESD distributed with RFQ packages. For ECUs which implement such IO control parameters, according flat services shall be defined on variant layer.

In contrast to this, the "otherStatus" bytes optionally available with IO control services are supported via the TABLE structures defined by the ESD. However, Renault / Nissan assumes that for ECUs which actually making use of these "otherStatus" bytes, the structure of these bytes does not depend on the IO control status parameter returned by the positive response of the IO control service. For ECUs where such a dependency exists, flat services shall be defined on variant layer to model this fact.

Finally, if a flat service is used to model the support for a particular LID, then that very same LID shall not also be defined in the IO control TABLE structures predefined by the ESD.

#### 3.3.5.9.1 StartTemporaryControl ($00)

Service $30 using the ControlOption 0x00 ("StartTemporaryControl") is predefined once in the ESD available from RFQ packages. It is marked final – ECU designers and suppliers shall not override or redefine this service in lower layers.

The service makes use of the predefined TABLEs TA_S30_00 and "TA_S30_PR" to specify both, the I/O's data record in the response and the content of the I/O in the request.

ECU designers can override both TABLEs: "TA_S30_00" and "TA_S30_PR" to tailor the set of I/O Controls. Please refer to section 3.3.4.4 for detailed tailoring rules (and a general overview of how I/O Controls can be defined).

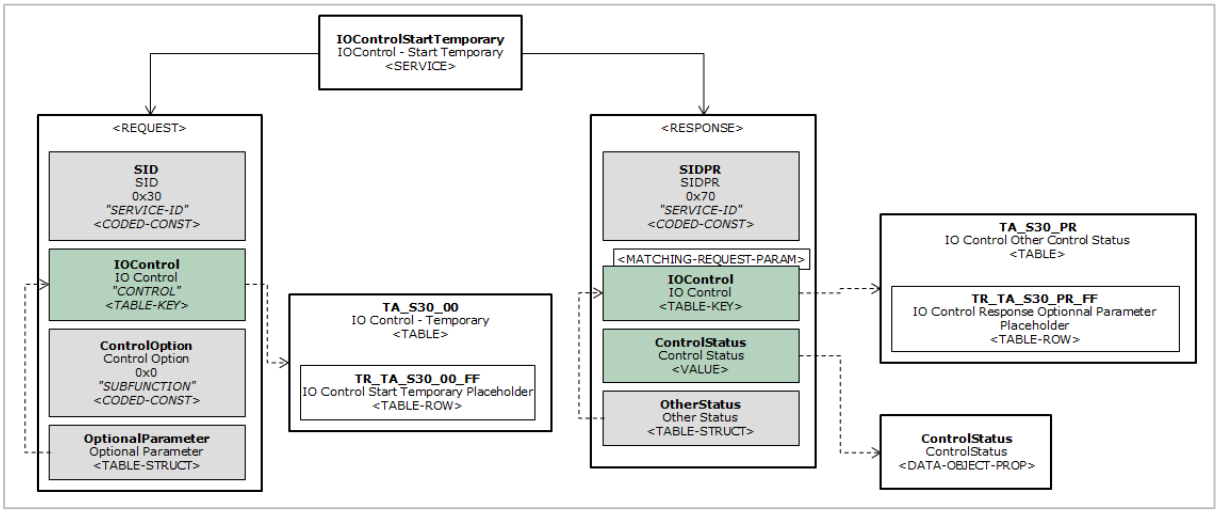


*Figure 19 Structure of DIAG-SERVICE IOControlStartTemporary ($30)*



Confidential C

Implementation requirements:

[Rule] The SHORT-NAME of the DIAG-SERVICE shall be "InputOutputControlByLocalIdentifier_Start_temporary_control".

[Rule] The LONG-NAME of the DIAG-SERVICE shall be "InputOutputControlByLocalIdentifier - Start temporary control.

[Rule] The DIAG-SERVICE shall be marked as IS-FINAL="true".

[Rule] The SEMANTIC attribute of the DIAG-SERVICE shall be set to "CONTROL".

[Rule] The DIAGNOSTIC-CLASS attribute shall not be used.

[Rule] The DIAG-SERVICE shall reference the FUNCT-CLASS "I_O_Controls".

[Rule] The request of the DIAG-SERVICE shall reference the TABLE "TA_S30_00" dynamically by SNREF.

[Rule] The response of the DIAG-SERVICE shall reference the TABLE "TA_S30_PR" dynamically by SNREF.

[Rule] The response of the DIAG-SERVICE shall reference the DATA-OBJECT-PROP "ControlStatus" by SNREF.

#### 3.3.5.9.2 StartPermanentControl ($20)

Service $30 using the ControlOption 0x20 ("StartPermanentControl") is predefined once in ESD available from RFQ packages. It is marked final – ECU designers and suppliers shall not override or redefine this service in lower layers.

The service makes use of the predefined TABLEs TA_S30_20 (IO Control – Permanent) and "TA_S30_PR" to specify both, the I/O's data record in the response and the content of the I/O in the request.

ECU designers can override both TABLEs: "TA_S30_20" (IO Control – Temporary) and "TA_S30_PR" to tailor the set of I/O Controls. Please refer to section 3.3.4.4**Erreur ! Source du renvoi introuvable.** for d etailed tailoring rules (and a general overview of how I/O Controls can be defined).

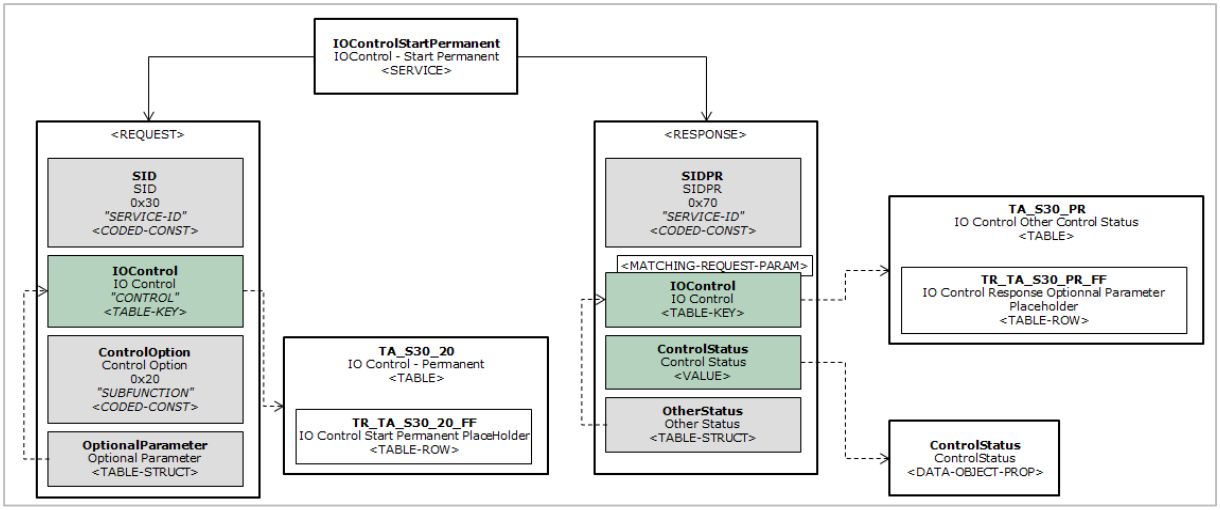


*Figure 20 Structure of DIAG-SERVICE IOControlStartPermanent ($30)*



Confidential C

Implementation requirements:

[Rule] The SHORT-NAME of the DIAG-SERVICE shall be "InputOutputControlByLocalIdentifier_Start_permanent_control".

[Rule] The LONG-NAME of the DIAG-SERVICE shall be "InputOutputControlByLocalIdentifier - Start permanent control".

[Rule] The DIAG-SERVICE shall be marked as IS-FINAL="true".

[Rule] The SEMANTIC attribute of the DIAG-SERVICE shall be set to "CONTROL".

[Rule] The DIAGNOSTIC-CLASS attribute shall not be used.

[Rule] The DIAG-SERVICE shall reference the FUNCT-CLASS "I_O_Controls".

[Rule] The request of the DIAG-SERVICE shall reference the TABLE "TA_S30_20" dynamically by SNREF.

[Rule] The response of the DIAG-SERVICE shall reference the TABLE "TA_S30_PR" dynamically by SNREF.

[Rule] The response of the DIAG-SERVICE shall reference the DATA-OBJECT-PROP "ControlStatus" by SNREF.

#### 3.3.5.9.3 StatusRequest ($01)

Service $30 using the ControlOption 0x01 ("StatusRequest") is predefined once in the ESD available from RFQ packages. It is marked final – ECU designers and suppliers shall not override or redefine this service in lower layers.

The service makes use of the predefined TABLEs TA_S30_01 (IO Control – Status) and "TA_S30_PR" to specify both, the I/O's data record in the response and the content of the I/O in the request.

ECU designers can override both TABLEs: "TA_S30_01" (IO Control – Status) and "TA_S30_PR" to tailor the set of I/O Controls. Please refer to section 3.3.4.4 for detailed tailoring rules (and a general overview of how I/O Controls can be defined).

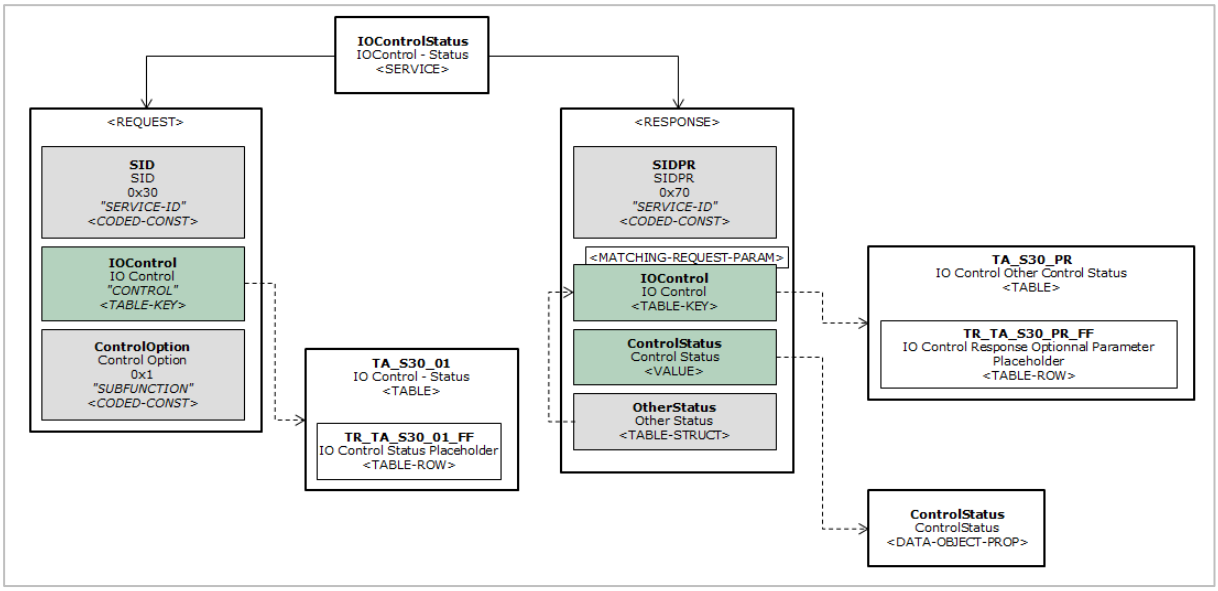


*Figure 21 Structure of DIAG-SERVICE IOControlStatus ($30)*



Confidential C

Implementation requirements:

[Rule] The SHORT-NAME of the DIAG-SERVICE shall be "InputOutputControlByLocalIdentifier_Status_request".

[Rule] The LONG-NAME of the DIAG-SERVICE shall be "InputOutputControlByLocalIdentifier - Status request.

[Rule] The DIAG-SERVICE shall be marked as IS-FINAL="true".

[Rule] The SEMANTIC attribute of the DIAG-SERVICE shall be set to "CONTROL".

[Rule] The DIAGNOSTIC-CLASS attribute shall not be used.

[Rule] The DIAG-SERVICE shall reference the FUNCT-CLASS "I_O_Controls".

[Rule] The request of the DIAG-SERVICE shall reference the TABLE "TA_S30_01" dynamically by SNREF.

[Rule] The response of the DIAG-SERVICE shall reference the TABLE "TA_S30_PR" dynamically by SNREF.

[Rule] The response of the DIAG-SERVICE shall reference the DATA-OBJECT-PROP "ControlStatus" by SNREF.

#### 3.3.5.9.4 StopControl ($11)

Service $30 using the ControlOption 0x11 ("StopControl") is predefined once in the ESD available from RFQ packages. It is marked final – ECU designers and suppliers shall not override or redefine this service in lower layers.

The service makes use of the predefined TABLEs TA_S30_11 (IO Control – Status and "TA_S30_PR" to specify both, the I/O's data record in the response and the content of the I/O in the request.

ECU designers can override both TABLEs: "TA_S30_11" (IO Control – Status) and "TA_S30_PR" to tailor the set of I/O Controls. Please refer to section 3.3.4.4 for detailed tailoring rules (and a general overview of how I/O Controls can be defined).

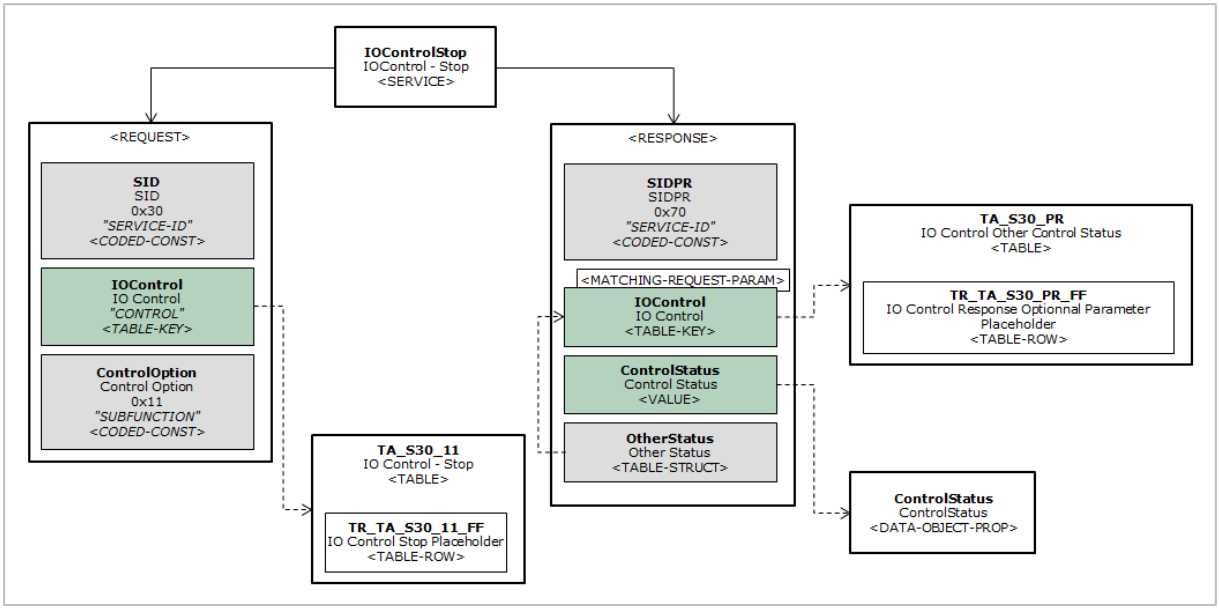


*Figure 22 Structure of DIAG-SERVICE IOControlStop ($30)*



Confidential C

Implementation requirements:

[Rule] The SHORT-NAME of the DIAG-SERVICE shall be "InputOutputControlByLocalIdentifier_Stop_control".

[Rule] The LONG-NAME of the DIAG-SERVICE shall be "InputOutputControlByLocalIdentifier - Stop control".

[Rule] The DIAG-SERVICE shall be marked as IS-FINAL="true".

[Rule] The SEMANTIC attribute of the DIAG-SERVICE shall be set to "CONTROL".

[Rule] The DIAGNOSTIC-CLASS attribute shall not be used.

[Rule] The DIAG-SERVICE shall reference the FUNCT-CLASS "I_O_Controls".

[Rule] The request of the DIAG-SERVICE shall reference the TABLE "TA_S30_11" dynamically by SNREF.

[Rule] The response of the DIAG-SERVICE shall reference the TABLE "TA_S30_PR" dynamically by SNREF.

[Rule] The response of the DIAG-SERVICE shall reference the DATA-OBJECT-PROP "ControlStatus" by SNREF.



Confidential C

#### 3.3.5.9.5 Support Check

For checking of supported controllable one-byte I/O Control LIDs, one DIAG-SERVICE "SupportedIOControlableLIDs" (using service $30) is predefined in the ESD available from RFQ packages.

Implementation requirements:

[Rule] The SHORT- and LONG-NAME of the DIAG-SERVICE shall be "SupportedIOControlable-LIDs".

[Rule] The DIAG-SERVICEs shall be marked as IS-FINAL="true".

[Rule] The SEMANTIC attribute of the DIAG-SERVICEs shall be set to "CONTROL".

[Rule] The DIAGNOSTIC-CLASS attribute shall not be used.

[Rule] The DIAG-SERVICEs shall reference the FUNCT-CLASS "Support Check".

[Rule] Both the request and the positive response of the DIAG-SERVICEs shall reference the TABLE "TA_SC_LID" statically. The TABLE shall not be overridden on variant layers.

[Rule] The service shall be marked as NOT-INHERITED on variant layers if the support check is not implemented in the described ECU.

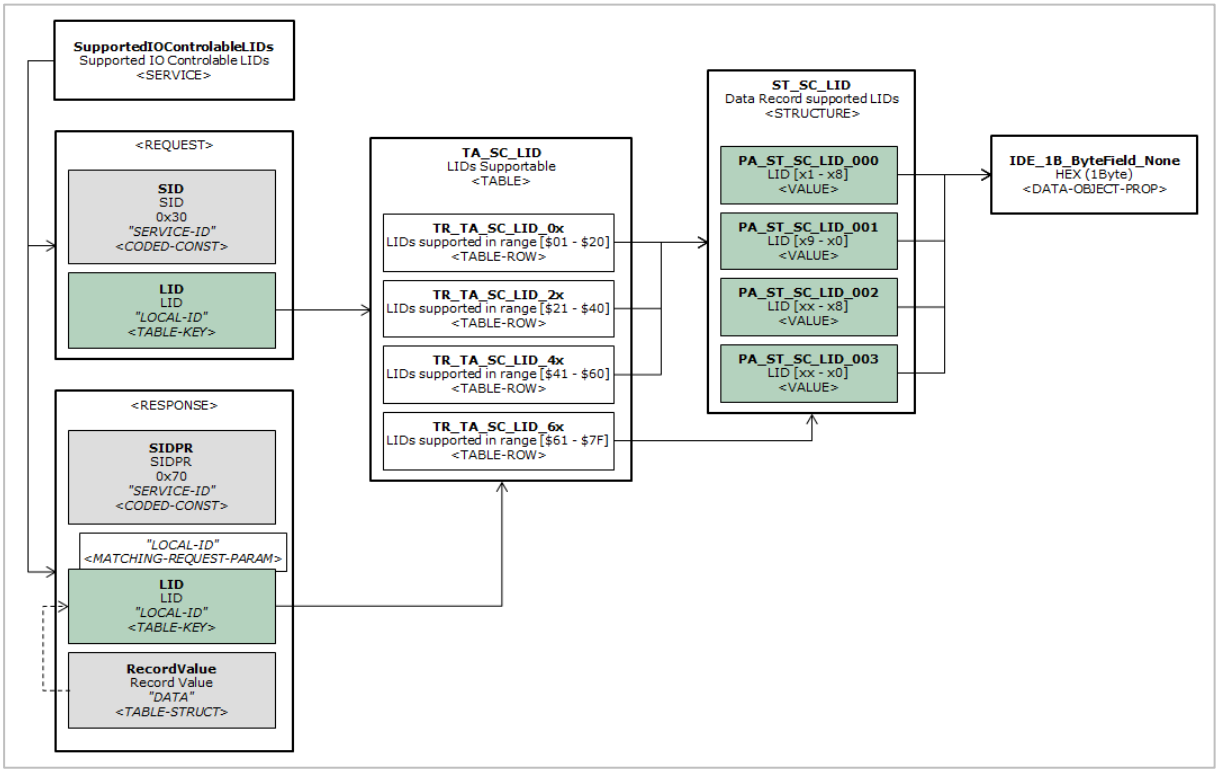


Figure 23 Structure of DIAG-SERVICE SupportedIOControlableLIDs ($30)



Confidential C

#### 3.3.5.10 ReadDTCInformation ($19)

The different sub functions of service $19 reference different TABLEs, TEXTTABLEs and other ODX elements for the definition of the associated fault data (such as DTCs, snapshots etc.) and the different interrelations between that data. Please cf. also section 3.3.4.5 for an overview focusing on those referenced data structures.

##### 3.3.5.10.1 ReportDtcByStatusMask (subfunction 0x02)

Service $1902 ("ReadDtcInformation – ReportDtcByStatusMask") is predefined once in the ESD available from RFQ packages. It is marked final – ECU designers and suppliers shall not override or redefine this service in lower layers

As shown in Figure 24, the definition of service $1902 makes use of the following ODX elements defining associated fault memory data:

- The STRUCTURE with SHORT-NAME "DtcStatusMask" which defines the individual DTC status bits used both in the request and the positive response.
- The STRUCTURE with SHORT-NAME "DtcStatusAvailabilityMask" which defines the DTC status bits returned in the positive response reflecting which status bits are supported by the ECU in the first place.
- The DTC-DOP with SHORT-NAME "DtcRecord" specifying the possible DTCs stored by in the ECU's fault memory.

All of these elements are predefined on RFQ level in the ESD. The latter two however are referenced via SHORT-NAME and are intended to be overridden on BASE-VARIANT level.

For the STRUCTURE "DtcStatusAvailabilityMask" this may be done optionally. The DTC-DOP with SHORT-NAME "DtcRecord" however must be overridden at BASE-VARIANT level. On RFQ level, it only contains a placeholder for the actual DTC data. Please refer to section 3.3.4.5 for a description of the detailed rules applicable for overriding this DTC-DOP and for defining DTCs of an ECU.

<u>Implementation requirements:</u>

[Rule] The SHORT-NAME of the DIAG-SERVICE shall be "ReadDtcInformation_ReportDtc-ByStatusMask".

[Rule] The LONG-NAME of the DIAG-SERVICE shall be "ReadDtcInformation-ReportDtcByStatus-Mask".

[Rule] The DIAG-SERVICE shall be marked as IS-FINAL="true".

[Rule] The SEMANTIC attribute of the DIAG-SERVICE shall be set to "FAULTREAD".

[Rule] The DIAGNOSTIC-CLASS attribute shall not be used.

[Rule] The DIAG-SERVICE shall reference the FUNCT-CLASS "Fault_Memory".

[Rule] The positive response of the DIAG-SERVICE shall reference the STRUCTURE with SHORT-NAME "DtcStatusAvailabilityMask" dynamically by SNREF.

[Rule] The positive response of the DIAG-SERVICE shall reference the DTC-DOP "DtcRecord" dynamically by SNREF.



Confidential C

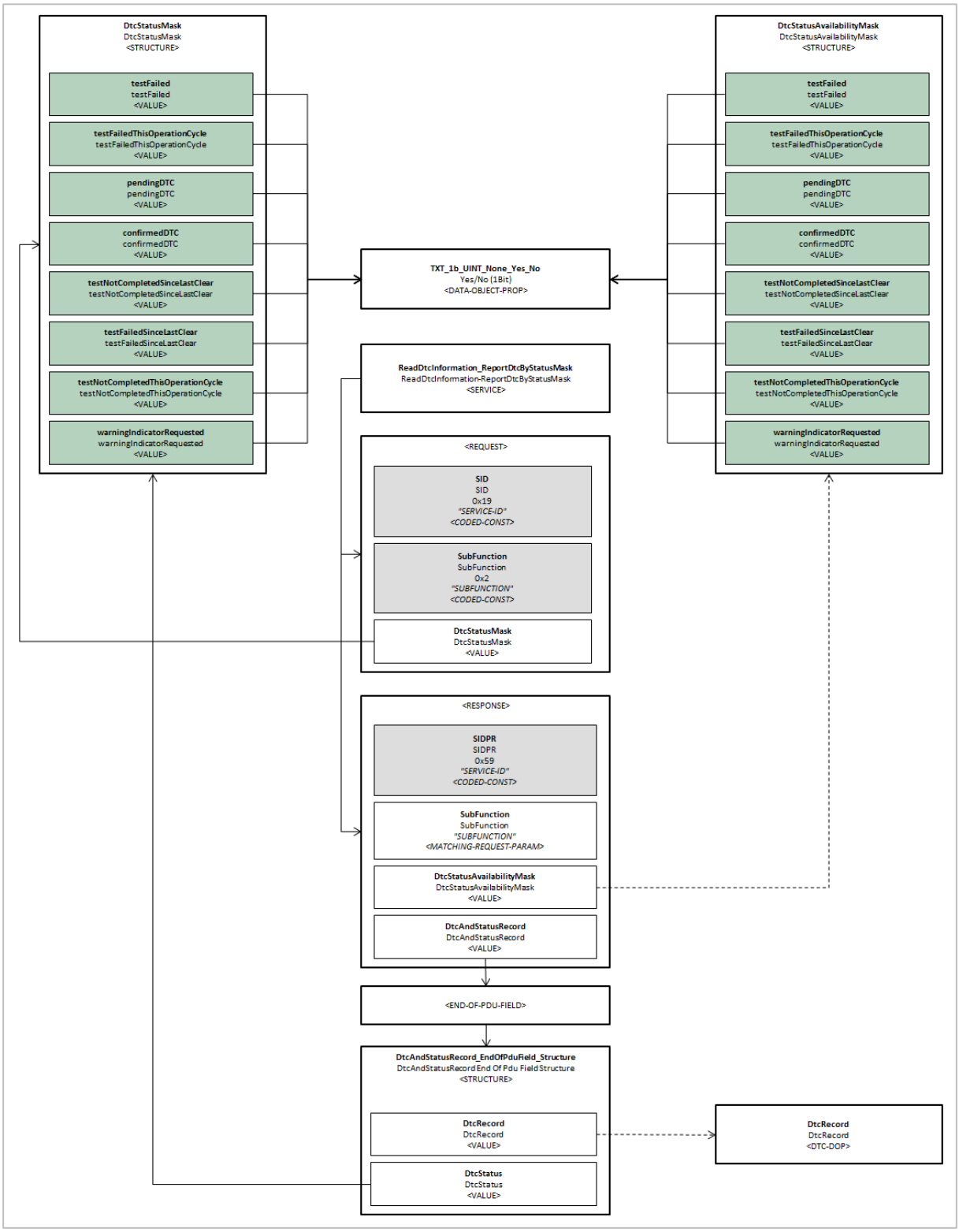


*Figure 24 ReadDtcInformation – ReportDtcByStatusMask ($1902)*



Confidential C

#### 3.3.5.10.2 ReportDtcSnapshotRecordByDtcNumber (subfunction 0x04)

Service $1904 ("ReadDtcInformation – ReportDtcSnapshotRecordByDtcNumber") is predefined once in the ESD available from RFQ packages. It is marked final – ECU designers and suppliers shall not override or redefine this service in lower layers.

As shown in Figure 25, the definition of service $1904 makes use of the following ODX elements defining associated fault memory data:

- The STRUCTURE with SHORT-NAME "DtcStatusMask" which defines the individual DTC status bits used in the positive response.
- The DTC-DOP with SHORT-NAME "DtcRecord" specifying the possible DTCs stored by in the ECU's fault memory which can be queried in the request of $1904.
- The DTC-DOP with SHORT-NAME "Devices" specifying the different devices implemented in the ECU for which DTCs might be stored (and their possible base DTC values).
- The TEXTTABLE with SHORT-NAME "FailureTypes" specifying the possible fault types for which DTCs might be stored (and their possible failure type bytes).
- The TEXTTABLE with SHORT-NAME "DtcSnapshotRecordNumbersRQ" defining the possible snapshot record number values which may be specified in the request of service $1904.
- The TEXTTABLE with SHORT-NAME "DtcSnapshotRecordNumbersPR" defining the possible snapshot record number values returned in the positive response of service $1904.
- The ENV-DATA-DESC with SHORT-NAME "SnapshotRecordContents" defining the different snapshot records which might be stored by the described ECU.

All of these elements are predefined at RFQ level in the ESD. Only the first one is not referenced via SHORT-NAME. All other elements must be overridden on variant level to define the devices, failure types, DTCs and snapshot records and snapshot record numbers actually supported by the described ECUs in the context of service $1904 (for on RFQ level, these elements contain placeholder data only).

Exempt from this is the TEXTTABLE with SHORT-NAME "FailureTypes": It may be overridden on variant level, but it is not required to do so, for this TEXTTABLE contains valid FailureTypes according to ISO15031-6 on the RFQ level already. Please refer to section 3.3.4.5 for a description of the detailed rules applicable for overriding these elements and for defining the associated fault memory data.

<u>Implementation requirements:</u>

[Rule] The SHORT-NAME of the DIAG-SERVICE shall be "ReadDtcInformation_ReportDtcSnapshotRecordByDtcNumber".

[Rule] The LONG-NAME of the DIAG-SERVICE shall be "ReadDtcInformation-ReportDtcSnapshotRecordByDtcNumber".

[Rule] The DIAG-SERVICE shall be marked as IS-FINAL="true".

[Rule] The SEMANTIC attribute of the DIAG-SERVICE shall be set to "FAULTREAD".

[Rule] The DIAGNOSTIC-CLASS attribute shall not be used.

[Rule] The DIAG-SERVICE shall reference the FUNCT-CLASS "Fault_Memory".

[Rule] The request of the DIAG-SERVICE shall reference the DTC-DOP with SHORT-NAME "DtcRecord" dynamically by SNREF.

[Rule] The request of the DIAG-SERVICE shall reference the TEXTTABLE with SHORT-NAME "DtcSnapshotRecordNumbersRQ" dynamically by SNREF.

[Rule] The positive response of the DIAG-SERVICE shall reference the TEXTTABLE with SHORT-NAME "DtcSnapshotRecordNumbersPR" dynamically by SNREF.

[Rule] The positive response of the DIAG-SERVICE shall reference the DTC-DOP with SHORT-NAME "Devices" dynamically by SNREF.



Confidential C

[Rule] The positive response of the DIAG-SERVICE shall reference the TEXTTABLE with SHORT-NAME “FailureTypes” dynamically by SNREF.

[Rule] The positive response of the DIAG-SERVICE shall reference the ENV-DATA-DESC with SHORT-NAME “SnapshotRecordContents” dynamically by SNREF.

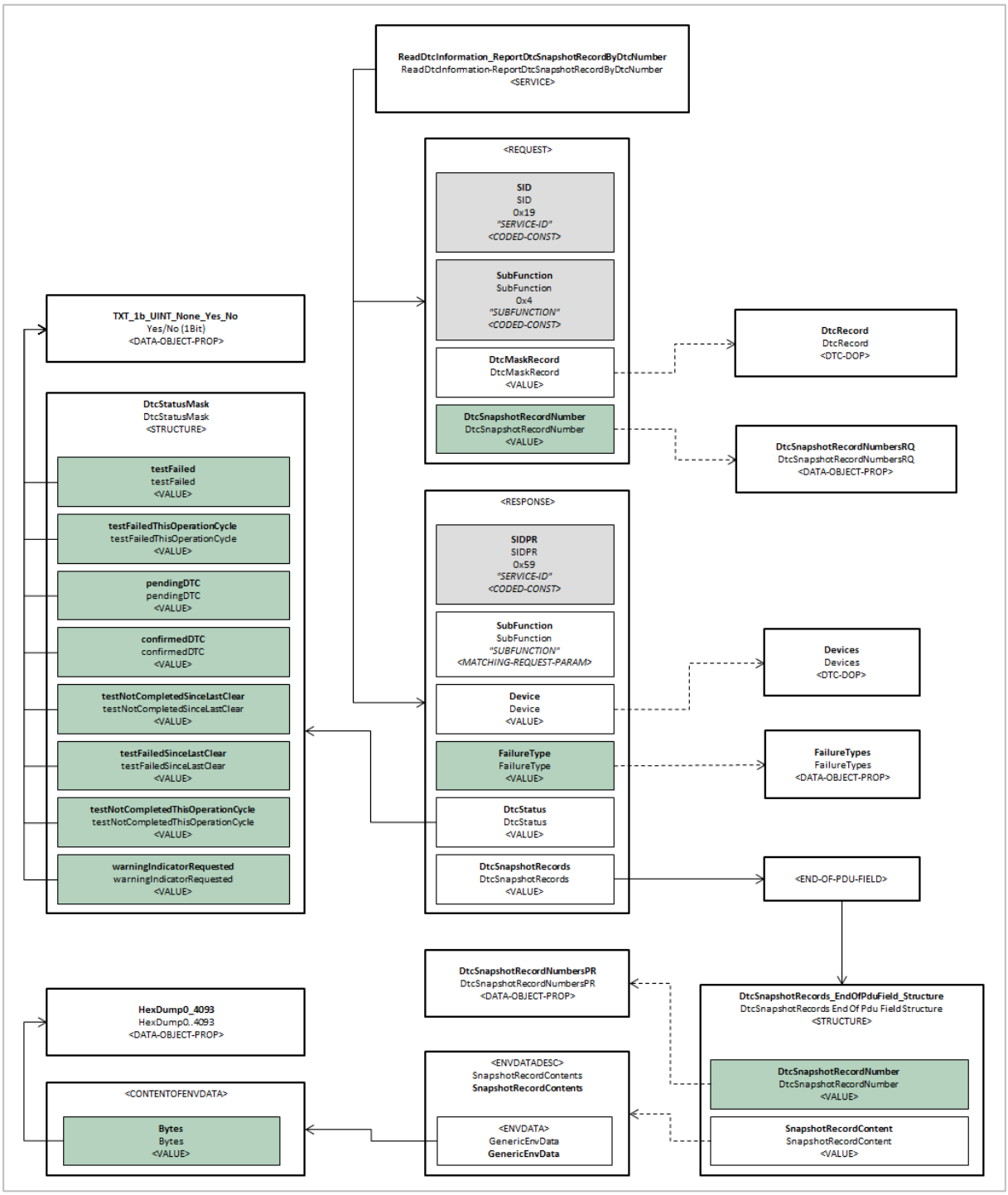


*Figure 25 ReadDtcInformation – ReportDtcSnapshotRecordByDtcNumber ($1904)*



Confidential C

#### 3.3.5.10.3 ReportDtcExtDataRecordByDtcNumber (subfunction 0x06)

Service $1906 ("ReadDtcInformation – ReportDtcExtDataRecordByDtcNumber") is predefined once in the ESD available from RFQ packages. It is marked final – ECU designers and suppliers shall not override or redefine this service in lower layers.

As shown in Figure 26, the definition of service $1906 makes use of the following ODX elements defining associated fault memory data:

- The STRUCTURE with SHORT-NAME "DtcStatusMask" which defines the individual DTC status bits used in the positive response.
- The DTC-DOP with SHORT-NAME "DtcRecord" specifying the possible DTCs stored by in the ECU's fault memory which can be queried in the request of $1906.
- The DTC-DOP with SHORT-NAME "Devices" specifying the different devices implemented in the ECU for which DTCs might be stored (and their possible base DTC values).
- The TEXTTABLE with SHORT-NAME "FailureTypes" specifying the possible fault types for which DTCs might be stored (and their possible failure type bytes).
- The DOP with SHORT-NAME "ExtendedDataRecordsTableKeys" defining the possible extended data record number values which may be specified in the request of service $1906.
- The TABLE with SHORT-NAME "ExtendedDataRecords" defining the possible extended data record number values returned in the positive response of service $1906.

All of these elements are predefined at RFQ level in the ESD. Only the first one is not referenced via SHORT-NAME. All other elements must be overridden on variant level to define the devices, failure types, DTCs and extended data records and extended data record numbers actually supported by the described ECUs in the context of service $1906 (for on RFQ level, these elements contain placeholder data only). Exempt from this is the TEXTTABLE with SHORT-NAME "FailureTypes": It may be overridden on variant level, but it is not required to do so, since this TEXTTABLE contains valid FailureTypes according to ISO15031-6 on the RFQ level already.

Please refer to section 3.3.4.5 for a description of the detailed rules applicable for overriding these elements and for defining the associated fault memory data.

<u>Implementation requirements:</u>

[Rule] The SHORT-NAME of the DIAG-SERVICE shall be "ReadDtcInformation_ReportDtcExtDataRecordByDtcNumber".

[Rule] The LONG-NAME of the DIAG-SERVICE shall be "ReadDtcInformation-ReportDtcExtDataRecordByDtcNumber".

[Rule] The DIAG-SERVICE shall be marked as IS-FINAL="true".

[Rule] The SEMANTIC attribute of the DIAG-SERVICE shall be set to "FAULTREAD".

[Rule] The DIAGNOSTIC-CLASS attribute shall not be used.

[Rule] The DIAG-SERVICE shall reference the FUNCT-CLASS "Fault_Memory".

[Rule] The request of the DIAG-SERVICE shall reference the DTC-DOP with SHORT-NAME "DtcRecord" dynamically by SNREF.

[Rule] The request of the DIAG-SERVICE shall reference the DOP with SHORT-NAME "ExtendedDataRecordsTableKeys" dynamically by SNREF.

[Rule] The positive response of the DIAG-SERVICE shall reference the DTC-DOP with SHORT-NAME "Devices" dynamically by SNREF.



Confidential C

[Rule] The positive response of the DIAG-SERVICE shall reference the TEXTTABLE with SHORT-NAME “FailureTypes” dynamically by SNREF.

[Rule] The positive response of the DIAG-SERVICE shall reference the TABLE with SHORT-NAME “ExtendedDataRecords” dynamically by SNREF.

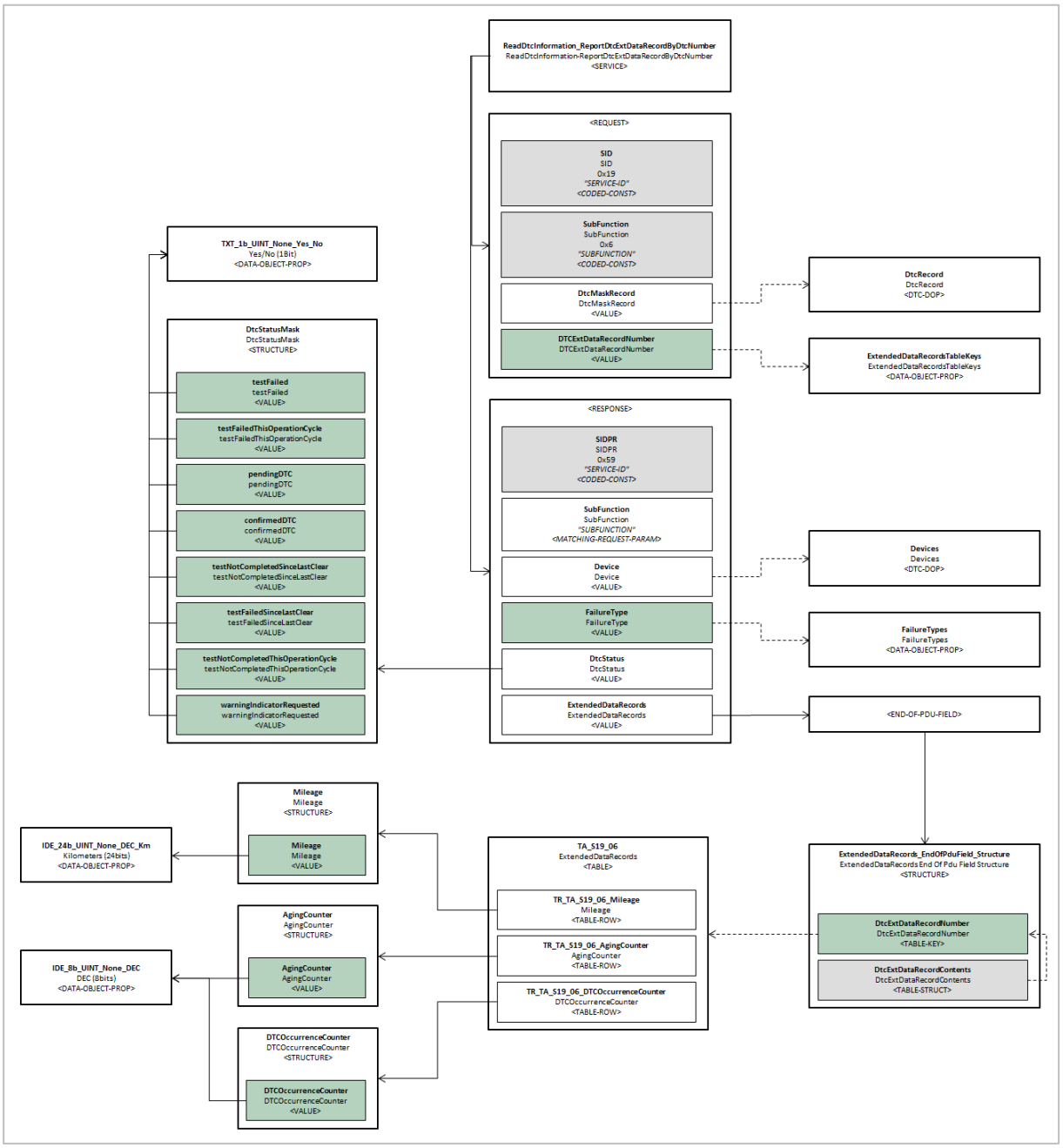


*Figure 26 ReadDtcInformation – ReportDtcExtDataRecordByDtcNumber ($1906)*



Confidential C

### 3.3.5.11 ClearAllDiagnosticInformation ($14FFFFFF)

Service $14FFFFFF ("ClearAllDiagnosticInformation") is predefined once in the ESD available from RFQ packages. It is marked final – ECU designers and suppliers shall not override or redefine this service in lower layers.

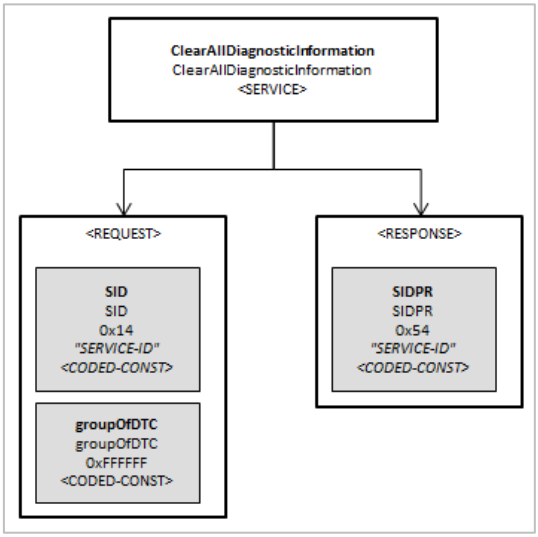


*Figure 27 Structure of DIAG-SERVICE ClearAllDiagnosticInformation ($14)*

<u>Implementation requirements:</u>

[Rule] The SHORT-NAME of the DIAG-SERVICE shall be "ClearAllDiagnosticInformation".

[Rule] The LONG-NAME of the DIAG-SERVICE shall be "ClearAllDiagnosticInformation".

[Rule] The DIAG-SERVICE shall be marked as IS-FINAL="true".

[Rule] The SEMANTIC attribute of the DIAG-SERVICE shall be set to "FAULTCLEAR".

[Rule] The DIAGNOSTIC-CLASS attribute shall not be used.

[Rule] The DIAG-SERVICE shall reference the FUNCT-CLASS "Fault_Memory".



Confidential C

### 3.3.5.12 StartRoutineByLocalIdentifier ($31)

StartRoutine might support two different RoutineEntryOption, it is required to define each RoutineEntryOption with its own DIAG-SERVICE. The following RoutineEntryOption exits:

- Perform Routine Request ($00)
- Status Request ($01)

#### 3.3.5.12.1 Perform routine request ($00)

Service $31 using the RoutineEntryOption 0x00 ("Perform Routine Request") is predefined once in the ESD available from RFQ packages. It is marked final – ECU designers and suppliers shall not override or redefine this service in lower layers.

The service makes use of the predefined TABLEs "TA_S31_RQ" and "TA_S31_PR" to specify both, the routine's data record in the response and the content of the routine in the request.

ECU designers can override both TABLEs: "TA_S31_RQ" and "TA_S31_PR" to tailor the set of routine. Please refer to section 3.3.4.6 for detailed tailoring rules (and a general overview of how I/O Controls can be defined).

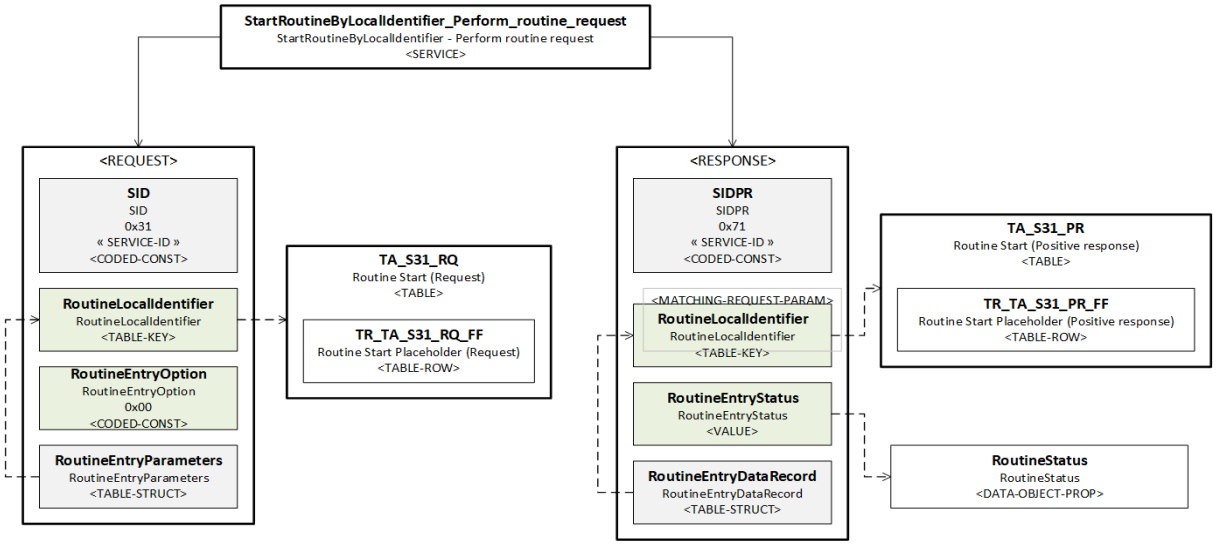


*Figure 28 Structure of DIAG-SERVICE StartRoutineByLocalIdentifier – Perform routine request (0x31)*

<u>Implementation requirements:</u>

[Rule] The SHORT-NAME of the DIAG-SERVICE shall be "StartRoutineByLocalIdentifier_Perform_routine_request".

[Rule] The LONG-NAME of the DIAG-SERVICE shall be "StartRoutineByLocalIdentifier - Perform routine request"

[Rule] The DIAG-SERVICE shall be marked as IS-FINAL="true".

[Rule] The SEMANTIC attribute of the DIAG-SERVICE shall be set to "ROUTINE".

[Rule] The DIAGNOSTIC-CLASS attribute shall not be used.

[Rule] The DIAG-SERVICE shall reference the FUNCT-CLASS "Routine_Control".

[Rule] The request of the DIAG-SERVICE shall reference the TABLE with SHORT-NAME "TA_S31_RQ" dynamically by SNREF.

[Rule] The positive response of the DIAG-SERVICE shall reference the TABLE with SHORT-NAME "TA_S31_PR" dynamically by SNREF.



Confidential C

#### 3.3.5.12.2 Status request ($01)

Service $31 using the RoutineEntryOption 0x01 ("Status Request") is predefined once in the ESD available from RFQ packages. It is marked final – ECU designers and suppliers shall not override or redefine this service in lower layers.

The service makes use of the predefined TABLEs "TA_S31_RQ" and "TA_S31_PR" to specify, the routine's data record in the response.

Specify the content of the routine in the request is not possible because of ISO specification.

ECU designers can override both TABLEs: "TA_S31_RQ" and "TA_S31_PR" to tailor the set of routine. Please refer to section 3.3.4.6 for detailed tailoring rules (and a general overview of how I/O Controls can be defined).

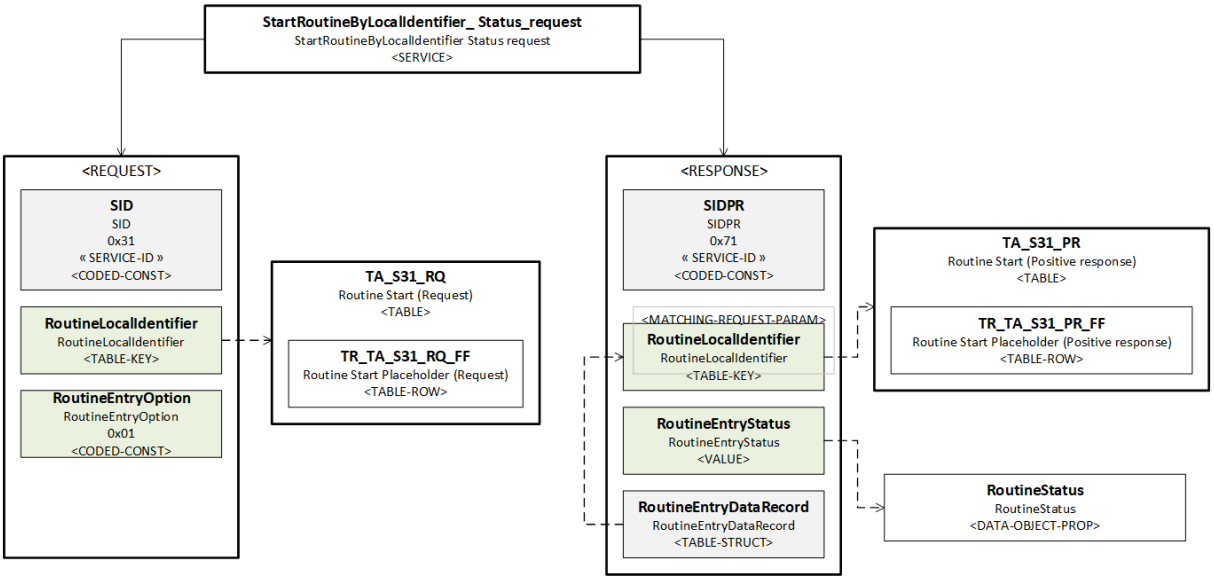


*Figure 29 Structure of DIAG-SERVICE StartRoutineByLocalIdentifier – Status request (0x31)*

<u>Implementation requirements:</u>

[Rule] The SHORT-NAME of the DIAG-SERVICE shall be "StartRoutineByLocalIdentifier_Status_request.

[Rule] The LONG-NAME of the DIAG-SERVICE shall be "StartRoutineByLocalIdentifier - Status request"

[Rule] The DIAG-SERVICE shall be marked as IS-FINAL="true".

[Rule] The SEMANTIC attribute of the DIAG-SERVICE shall be set to "ROUTINE".

[Rule] The DIAGNOSTIC-CLASS attribute shall not be used.

[Rule] The DIAG-SERVICE shall reference the FUNCT-CLASS "Routine_Control".

[Rule] The request of the DIAG-SERVICE shall reference the TABLE with SHORT-NAME "TA_S31_RQ" dynamically by SNREF.

[Rule] The positive response of the DIAG-SERVICE shall reference the TABLE with SHORT-NAME "TA_S31_PR" dynamically by SNREF.



Confidential C

#### 3.3.5.12.3 Support Check

For checking of supported one-byte routine controllable LIDs, one DIAG-SERVICE "SupportedRoutine-ControlableLIDs" (using service $31) is predefined in the ESD available from RFQ packages.

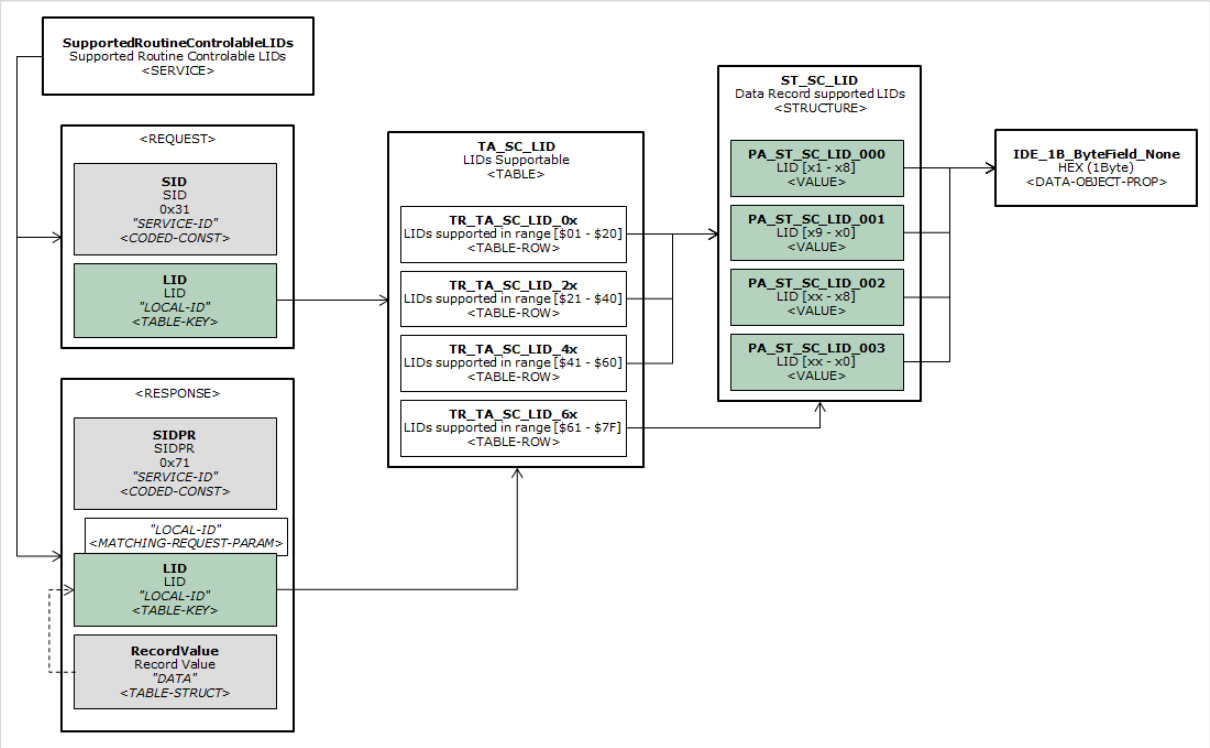


*Figure 30 Structure of DIAG-SERVICE SupportedRoutineControlableLIDs ($31)*

Implementation requirements:

[Rule] The SHORT- and LONG-NAME of the DIAG-SERVICE shall be "SupportedRoutine-ControlableLIDs".

[Rule] The DIAG-SERVICEs shall be marked as IS-FINAL="true".

[Rule] The SEMANTIC attribute of the DIAG-SERVICEs shall be set to "ROUTINE".

[Rule] The DIAGNOSTIC-CLASS attribute shall not be used.

[Rule] The DIAG-SERVICEs shall reference the FUNCT-CLASS "Support Check".

[Rule] Both the request and the positive response of the DIAG-SERVICEs shall reference the TABLE "TA_SC_LID" statically. The TABLE shall not be overridden on variant layers.

[Rule] The service shall be marked as NOT-INHERITED on variant layers if the support check is not implemented in the described ECU.



Confidential C

### 3.3.5.13 StopRoutineByLocalIdentifier ($32)

Service $32 ("StopRoutineByLocalIdentifier") is predefined once in the ESD available from RFQ packages. It is marked final – ECU designers and suppliers shall not override or redefine this service in lower layers

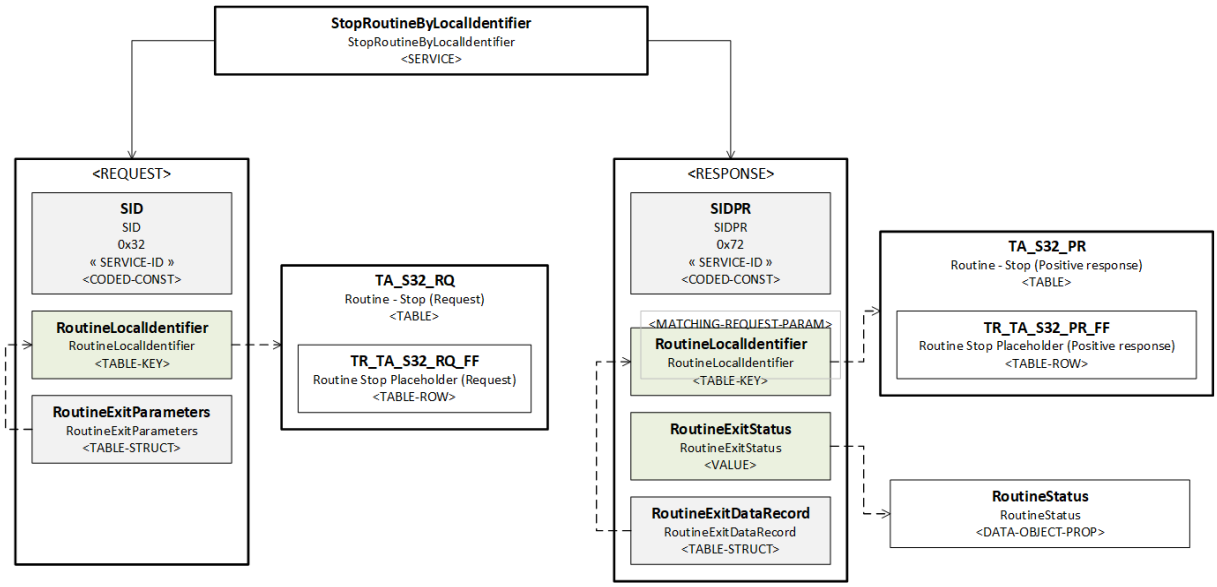


*Figure 31 Structure of DIAG-SERVICE StopRoutineByLocalIdentifier (0x32)*

<u>Implementation requirements:</u>

[Rule] The SHORT-NAME of the DIAG-SERVICE shall be "StopRoutineByLocalIdentifier".

[Rule] The LONG-NAME of the DIAG-SERVICE shall be "StopRoutineByLocalIdentifier".

[Rule] The DIAG-SERVICE shall be marked as IS-FINAL="true".

[Rule] The SEMANTIC attribute of the DIAG-SERVICE shall be set to "ROUTINE".

[Rule] The DIAGNOSTIC-CLASS attribute shall not be used.

[Rule] The DIAG-SERVICE shall reference the FUNCT-CLASS "Routine_Control".

[Rule] The request of the DIAG-SERVICE shall reference the TABLE with SHORT-NAME "TA_S32_RQ" dynamically by SNREF.

[Rule] The positive response of the DIAG-SERVICE shall reference the TABLE with SHORT-NAME "TA_S32_PR" dynamically by SNREF.



Confidential C

### 3.3.5.14 SecurityAccess ($27)

Requesting a seed and sending a key make use of services with slightly differing service specifications. Therefore, the two use cases are supported by two different DIAG-SERVICEs.

#### 3.3.5.14.1 Security Access – Request Seed

Service $27 to request a security access seed (using odd numbers as sub-function) is predefined once in the Renault Nissan ESD available from RFQ packages. It is marked final – ECU designers and suppliers shall not override or redefine this service in lower layers.

The service makes use of the predefined TABLE "TA_S27_RS" to specify security access related sub-functions for the request. The TABLE in the Renault Nissan ESD encompasses the set of security access levels predefined by the RFQ package.

ECU designers may override the TABLE "TA_S27_RS" to tailor this predefined set of security levels for ECUs which support a different set of levels but only as long as the overridden set is **in accordance with one of the security models predefined by Renault / Nissan**. Please refer to the section 3.3.7.3 for detailed tailoring rules.

The positive response of the DIAG-SERVICE defines a VALUE "securitySeed" which references the predefined DATA-OBJECT-PROP "SecuritySeed" for all security access request seed sub-functions. It is not possible to define different seed lengths for different request seed sub functions, but ECU designers may override the DATA-OBJECT-PROP "SecuritySeed" to specify a different seed length for all sub functions. The used seed length must thereby be **in accordance with one of the security models predefined by Renault / Nissan**.

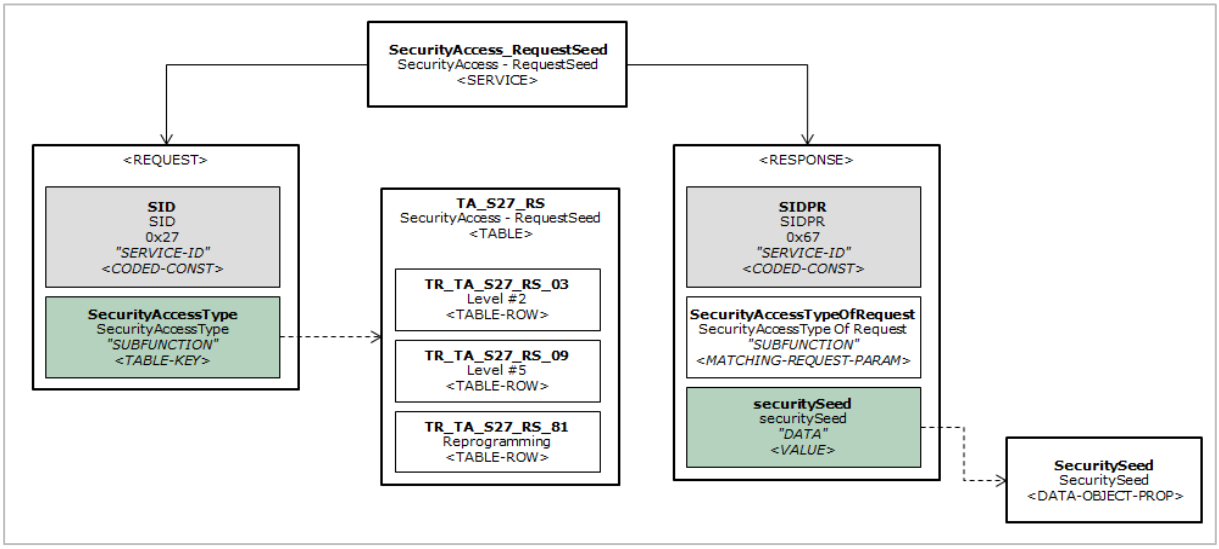


*Figure 32 Structure of DIAG-SERVICE SecurityAccess_requestSeed ($27)*



Confidential C

Implementation requirements:

[Rule] The SHORT-NAME of the DIAG-SERVICE shall be "SecurityAccess_requestSeed".

[Rule] The LONG-NAME of the DIAG-SERVICE shall be "SecurityAccess - requestSeed".

[Rule] The DIAG-SERVICE shall be marked as IS-FINAL="true".

[Rule] The SEMANTIC attribute of the DIAG-SERVICE shall be set to "SECURITY".

[Rule] The DIAGNOSTIC-CLASS attribute shall not be used.

[Rule] The DIAG-SERVICE shall reference the FUNCT-CLASS "SecurityAccess".

[Rule] The request of the DIAG-SERVICE shall reference the TABLE "TA_S27_RS" dynamically by SNREF.

[Rule] The securitySeed param of the DIAG-SERVICE's POS-RESPONSE shall reference the DATA-OBJECT-PROP "SecuritySeed" by SNREF.

#### 3.3.5.14.2 Security Access – Send Key

Service $27 to send a security access key (using even numbers as sub-function) is predefined once in the Renault Nissan ESD available from RFQ packages. It is marked final – ECU designers and suppliers shall not override or redefine this service in lower layers.

The service makes use of the predefined TABLE "TA_S27_SK" to specify security access related sub-function for the request. The TABLE in the Renault Nissan ESD encompasses the set of security access levels predefined by the RFQ package.

ECU designers may override the TABLE "TA_S27_SK" to tailor this predefined set of security levels for ECUs which support a different set of levels but only as long as the overridden set is **in accordance with one of the security models predefined by Renault / Nissan**. Please refer to the section 3.3.7.3 for detailed tailoring rules.

The request of the DIAG-SERVICE defines a VALUE "securityKey" which references the predefined DATA-OBJECT-PROP "SecurityKey" for all security access send key sub-functions. It is not possible to define different key lengths for different request seed sub-functions, but ECU designers may override the DATA-OBJECT-PROP "SecurityKey" to specify a different seed length for all sub functions if the used key length is **in accordance with one of the security models predefined by Renault / Nissan**.



Confidential C

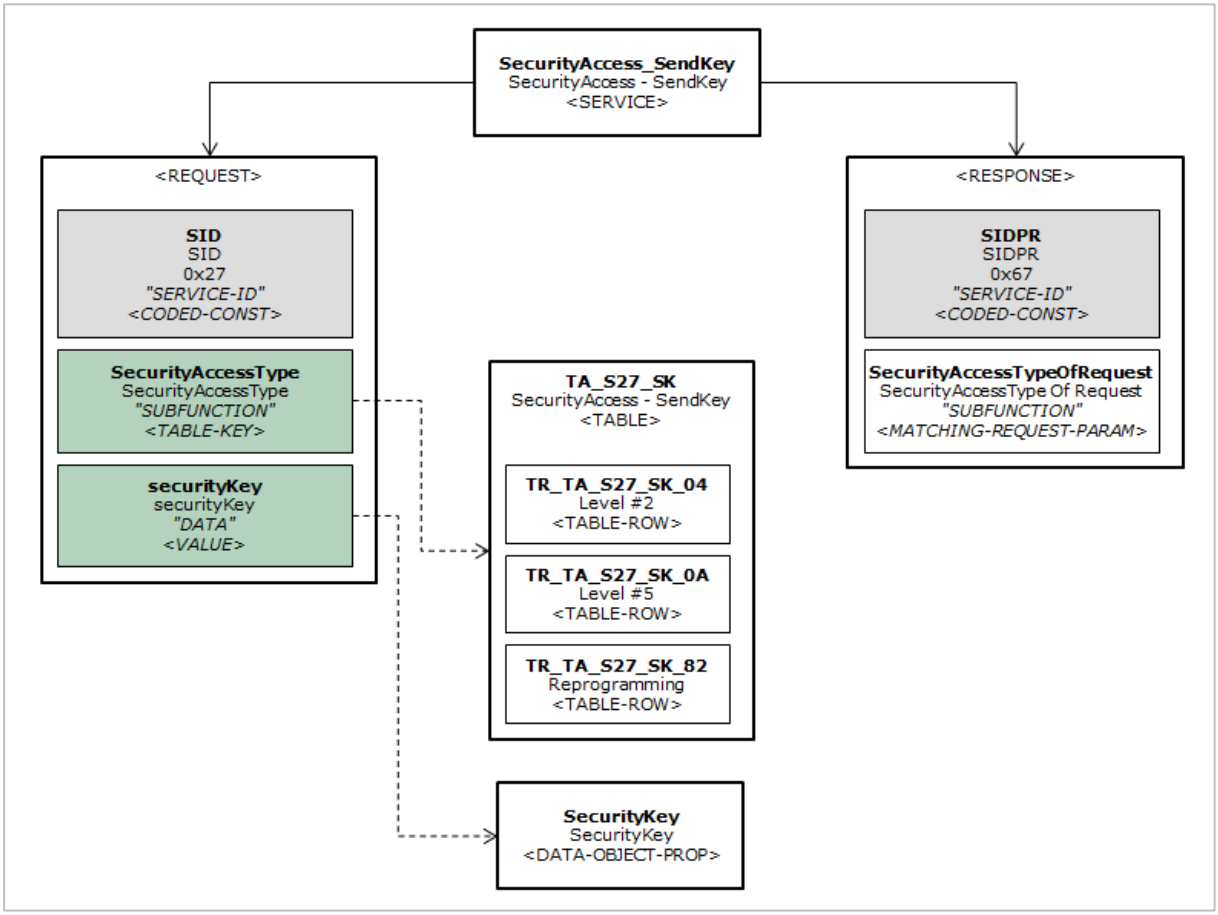


*Figure 33 Structure of DIAG-SERVICE SecurityAccess_sendKey ($27)*

<u>Implementation requirements:</u>

[Rule] The SHORT-NAME of the DIAG-SERVICE shall be "SecurityAccess_sendKey".

[Rule] The LONG-NAME of the DIAG-SERVICE shall be "SecurityAccess - sendKey".

[Rule] The DIAG-SERVICE shall be marked as IS-FINAL="true".

[Rule] The SEMANTIC attribute of the DIAG-SERVICE shall be set to "SECURITY".

[Rule] The DIAGNOSTIC-CLASS attribute shall not be used.

[Rule] The DIAG-SERVICE shall reference the FUNCT-CLASS "SecurityAccess".

[Rule] The request of the DIAG-SERVICE shall reference the TABLE "TA_S27_SK" dynamically by SNREF.

[Rule] The securityKey param of the DIAG-SERVICE's POS-RESPONSE shall reference the DATA-OBJECT-PROP "SecurityKey" by SNREF.



Confidential C

### 3.3.5.15 EcuReset ($11)

Service $11 is predefined once in the ESD available from RFQ packages. It is marked final – ECU designers and suppliers shall not override or redefine this service in lower layers.

The service makes use of the predefined TABLE "TA_S11" to specify the supported reset types. The following reset types are thereby predefined:

- hardReset (0x01)
- keyOffOnReset (0x02)
- softReset (0x03)
- enableRapidPowerShutDown (0x04)
- disableRapidPowerShutDown (0x05)

ECU designers may override that TABLE to tailor these presets for ECUs which support a different set of reset types. Please refer to section 3.3.4.8 for the exact tailoring rules.

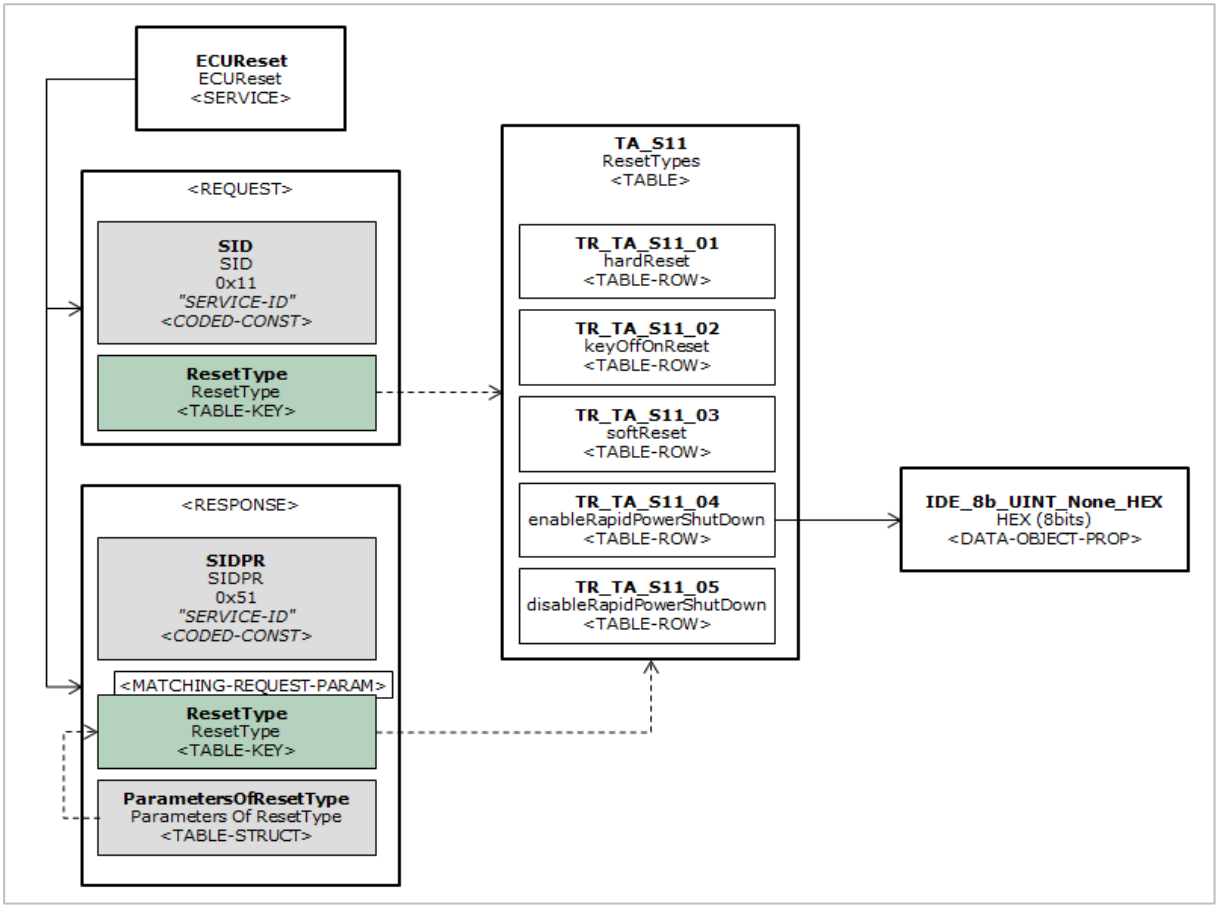


*Figure 34 Structure of DIAG-SERVICE ECUReset (0x11)*

<u>Implementation requirements:</u>

[Rule] The SHORT- and LONG-NAME of the DIAG-SERVICE shall be "ECUReset".

[Rule] The SEMANTIC attribute of the DIAG-SERVICE shall be set to "FUNCTION"

[Rule] The DIAG-SERVICE shall not use the DIAGNOSTIC-CLASS attribute.

[Rule] It shall be marked as IS-FINAL="true".

[Rule] The DIAG-SERVICE shall reference the FUNCT-CLASS "ECUReset".

[Rule] The request of the DIAG-SERVICE shall reference the TABLE "TA_S11" dynamically by SNREF.



Confidential C

### 3.3.5.16 TesterPresent ($3E)

Service $3E ("TesterPresent") is predefined once in the ESD available from RFQ packages. It is marked final – ECU designers and suppliers shall not override or redefine this service in lower layers.

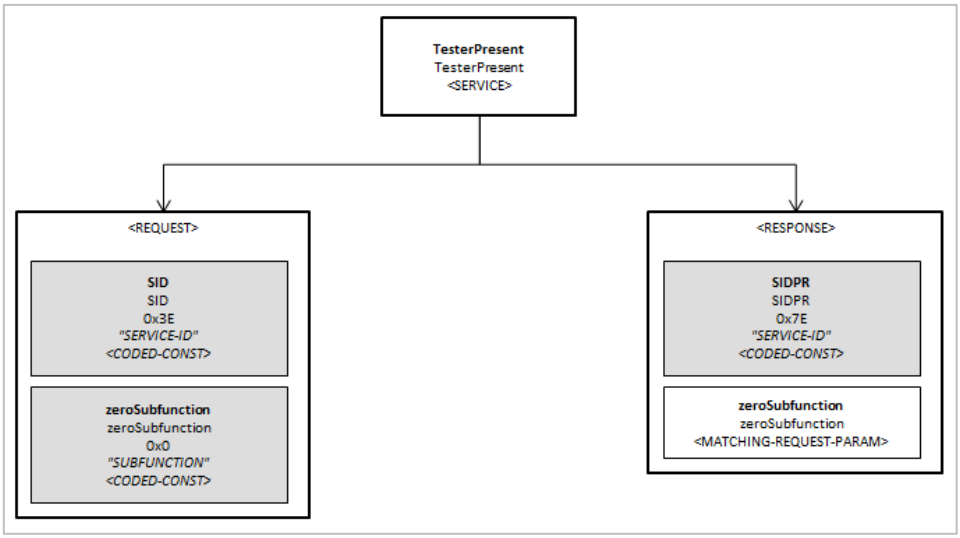


*Figure 35 DIAG-SERVICE TesterPresent ($3E)*

Implementation requirements:

[Rule] The DIAG-SERVICE shall have the SHORT-/LONG-NAME "TesterPresent".

[Rule] The SEMANTIC attribute of the DIAG-SERVICE shall be set to "TESTERPRESENT".

[Rule] The DIAG-SERVICE shall not use the DIAGNOSTIC-CLASS attribute.

[Rule] The DIAG-SERVICE shall reference the FUNCT-CLASS "TesterPresent"

[Rule] It shall be marked as IS-FINAL="true".

[Rule] It shall be marked as IS-MANDATORY="true".

### 3.3.5.17 CommunicationControl ($28)

Service $28 ("CommunicationControl") is predefined once in the ESD available from RFQ packages. It is marked final – ECU designers and suppliers shall not override or redefine this service in lower layers.

The service makes use of the predefined TABLE "TA_S28" to specify the supported sub-functions. The following sub-functions are thereby predefined:

- enableRxAndTx (0x00)
- enableRxAndDisableTx (0x01)
- disableRxAndEnableTx (0x02)
- disableRxAndTx(0x03)

ECU designers may override TABLE "TA_S28" on variant layers to tailor these presets for ECUs which support a different set of sub-functions.

The ODX elements used by service $28 are shown in Figure 36.



Confidential C

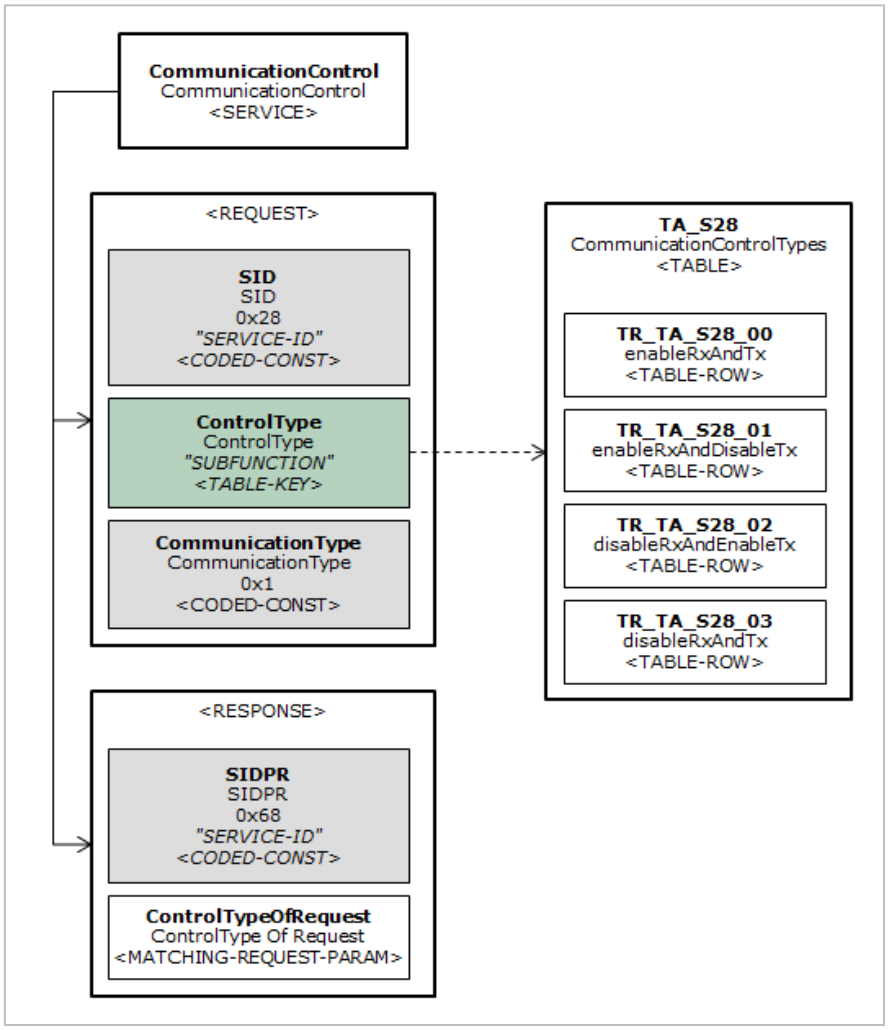


*Figure 36 DIAG-SERVICE CommunicationControl ($28)*

<u>Implementation requirements:</u>

[Rule] The DIAG-SERVICE shall have the SHORT-/LONG-NAME “CommunicationControl”.

[Rule] The DIAG-SERVICE shall be marked as IS-FINAL=”true”.

[Rule] The SEMANTIC attribute of the DIAG-SERVICE shall be set to “COMMUNICATION”.

[Rule] The DIAGNOSTIC-CLASS attribute shall not be used.

[Rule] The DIAG-SERVICE shall reference the FUNCT-CLASS “CommunicationControl”.

[Rule] The request of the DIAG-SERVICE shall reference the TABLE “TA_S28” dynamically by SNREF.



Confidential C

### 3.3.5.18 ReadMemoryByAddress ($23)

Service $23 ("ReadMemoryByAddress") is predefined once in the ESD available from RFQ packages. It is marked final – ECU designers and suppliers shall not override or redefine this service in lower layers.

The ODX elements used by service $23 are shown in Figure 37.

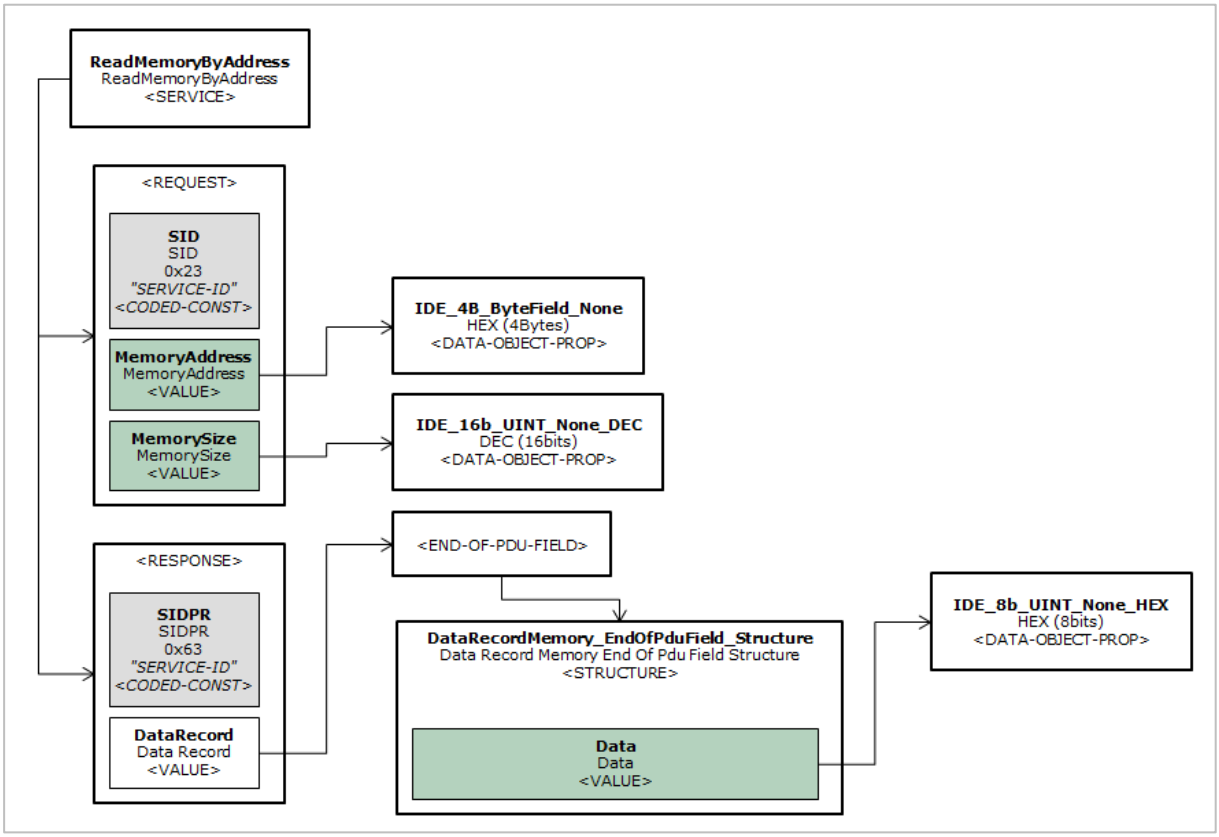


*Figure 37 DIAG-SERVICE ReadMemoryByAddress ($23)*

<u>Implementation requirements:</u>

[Rule] The DIAG-SERVICE shall have the SHORT-/LONG-NAME "ReadMemoryByAddress".

[Rule] The DIAG-SERVICE shall be marked as IS-FINAL="true".

[Rule] The SEMANTIC attribute of the DIAG-SERVICE shall be set to "MEMORYREAD".

[Rule] The DIAGNOSTIC-CLASS attribute shall not be used.

[Rule] The DIAG-SERVICE shall reference the FUNCT-CLASS "Memory".



Confidential C

### 3.3.5.19 WriteMemoryByAddress ($3D)

Service $3D ("WriteMemoryByAddress") is predefined once in the ESD available from RFQ packages. It is marked final – ECU designers and suppliers shall not override or redefine this service in lower layers.

The ODX elements used by service $3D are shown in Figure 38.

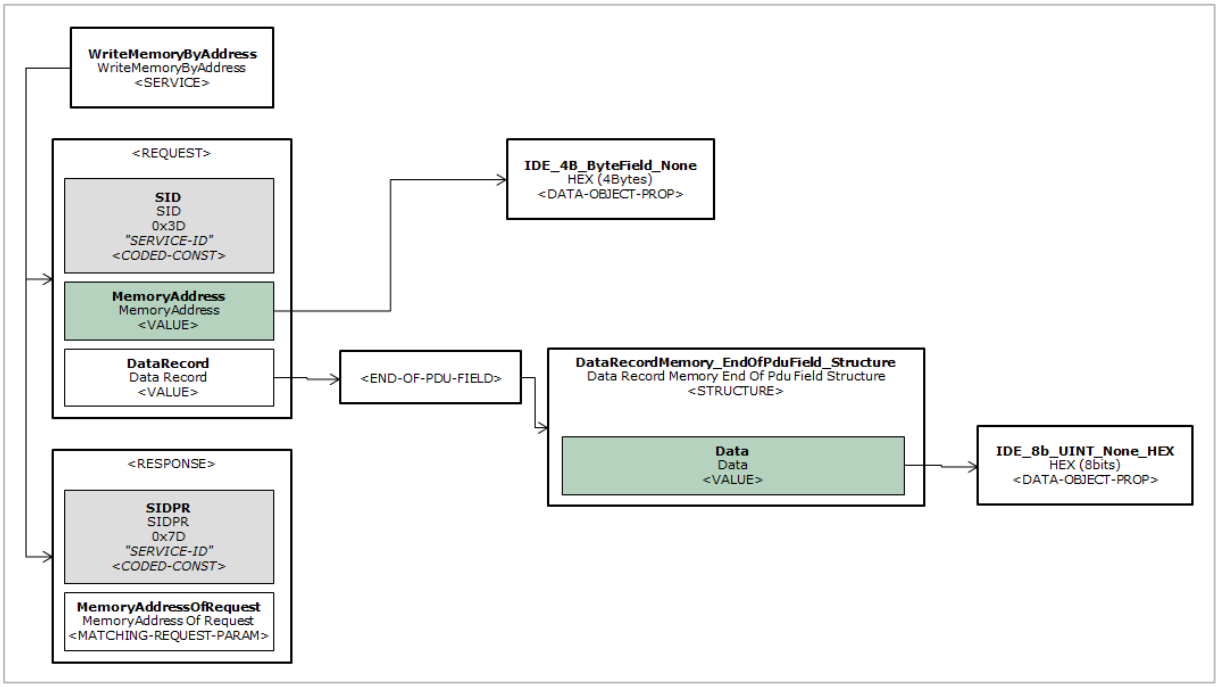


*Figure 38 DIAG-SERVICE WriteMemoryByAddress ($3D)*

<u>Implementation requirements:</u>

[Rule] The DIAG-SERVICE shall have the SHORT-/LONG-NAME "WriteMemoryByAddress".

[Rule] The DIAG-SERVICE shall be marked as IS-FINAL="true".

[Rule] The SEMANTIC attribute of the DIAG-SERVICE shall be set to "MEMORYWRITE".

[Rule] The DIAGNOSTIC-CLASS attribute shall not be used.

[Rule] The DIAG-SERVICE shall reference the FUNCT-CLASS "Memory".



Confidential C

### 3.3.6 GLOBAL-NEG-RESPONSE

Renault / Nissan does not deviate from ISO negative response handling. As a result, it is not allowed to define NEG-RESPONSE at DIAG-SERVICE level (cf. section 3.3.5.1). Instead, the diagnostic specification ESDs listed in Table 2 define GLOBAL-NEG-RESPONSEs as shown in Figure 39.

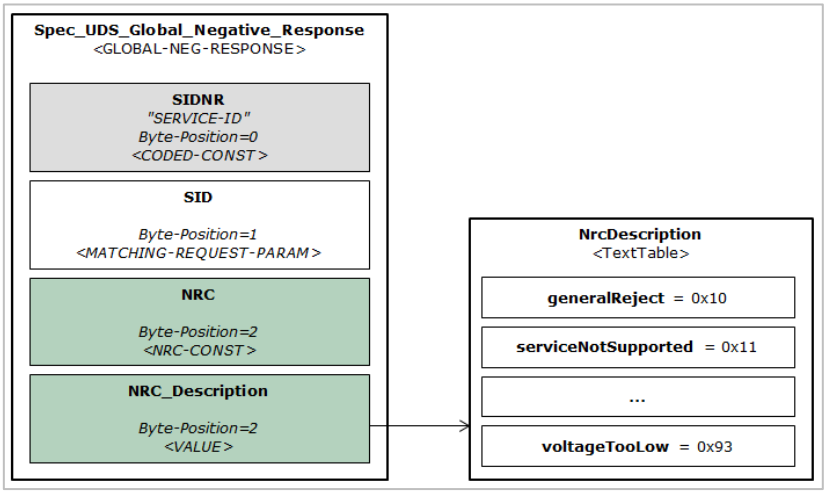


*Figure 39 Structure of GLOBAL-NEG-RESPONSE*

The MATCHING-REQUEST-PARAM at byte position 1 references the request service identifier. The NRC-CONST at byte position 2 defines the set of possible negative return codes while the text table referenced by the VALUE at the same byte position provides a textual representation of those values.

<u>Implementation requirements:</u>

[Rule] No GLOBAL-NEG-RESPONSE shall be defined outside of the diagnostic specification ESDs listed in Table 2.

[Rule] Each of these ESDs shall define exactly one GLOBAL-NEG-RESPONSE.



Confidential C

## 3.3.7 DIAG-DATA-DICTIONARY-SPEC

### 3.3.7.1 General Rules for PARAMs

In Renault / Nissan ODX, the main role of PARAMs is to represent the actual data stored in the ECU or transmitted between the ECU and testers. This is particularly true for VALUE PARAMs used in requests and positive responses of services (including PARAMs indirectly used, e. g. when contained in STRUCTUREs which are used from requests or responses).

This fact is primarily reflected in the rules and recommendations for the PARAMs' names which should be detached from peripheral information such as the conversions applied to those PARAMs by testers or the internal structure of the stored data. This strong, rather non-technical focus on the actual data represented by PARAMs results in the necessity to fulfill additional side conditions when modelling data with PARAMs – restricting the large design freedom given by ODX for that task in the first place.

On the one hand, these additional constraints shall make sure that the long-proven philosophy concerning data modelling and management is also preserved in future ODX based development of Renault / Nissan ECUs; on the other side, it shall make sure that those descriptions can be converted without loss into the DDT format which already incorporates that philosophy to great extent.

<u>Implementation requirements:</u>

[Rule] The uppercase representation of an ODX PARAM's LONG-NAME shall either be unique amongst all uppercase PARAM LONG-NAME representations of the whole ODX model or all PARAMs having the same uppercase LONG-NAME representation shall either all reference the same DOP or DOPs which only differ in their byte orders from one another.

[Reco] LONG-NAMEs of PARAMs should reflect the actual data stored in the ECU or transmitted between testers and the ECU which is represented by the PARAMs; LONG-NAMEs of PARAMs should not contain information specific to the structure of or the interpretation of or the conversion applied to the data they represent.

[Reco] Different PARAM names should not be introduced out of the mere wish to reflect different representations related to different physical measurement systems, e. g. representation of a speed in kilometres per hour vs miles per hour. Instead, appropriate DOPs should be referenced which make use of appropriate unit specs to reflect this.



Confidential C

#### 3.3.7.2 General Recommendations for DOPs

In Renault / Nissan ODX, the main role of DOPs is actually to merely represent data interpretation rules, conversions or data formats. It is not their role to represent in any way actual data stored in the ECU or transmitted between the ECU and testers.

This is why many DOPs are predefined in Renault / Nissan ODX models intended for reuse in lower layers. The definition of ECU specific DOPs is possible, if needed, though reuse, preferably from the Datas Format ESD, should be preferred if at all possible.

Implementation requirements:

[Reco] DESCRIPTIONs should be avoided for DOPs used in models which are intended to be converted into DDT format, as that information will be lost during conversion.

[Reco] Definition of DOPs at BASE-VARIANT or ECU-VARIANT level should be avoided; if at all possible, DOPs should be reused from the predefined Datas Format ESD.

[Reco] LONG-NAMEs of DOPs should reflect the conversions / data formats modelled by that DOP and only that information; specifically, LONG-NAMEs of DOPs should not contain information specific to the actual data stored in the ECU or transmitted between testers and the ECU on which the conversion is applied. An exception to this is the naming of TEXTTABLEs which generally do contain data specific information as a matter of fact.

[Reco] Additional DOPs should not be introduced to only support different representations related to different physical measurement system, e. g. representation of a speed in kilometres per hour vs miles per hour. If at all possible, authors should revert to defining or reusing appropriate unit specs. Note in particular that authors may reuse predefined ODX RS unit specs and are encouraged to do so.



Confidential C

#### 3.3.7.3 Summary of Special Rules for SHORT-NAMEs

[Rule] The SHORT-NAME of the TABLE "LIDs Readable" referenced by the DIAG-SERVICE with SHORT-NAME "ReadDataByLocalIdentifier" shall be "TA_S21".

[Rule] The SHORT-NAME of the TABLE "DIDs Readable" referenced by the DIAG-SERVICE with SHORT-NAME "ReadDataByIdentifier" shall be "TA_S22".

[Rule] The SHORT-NAME of the TABLE "LIDs Writeable" referenced by the DIAG-SERVICE with SHORT-NAME "WriteDataByLocalIdentifier" shall be "TA_S3B".

[Rule] The SHORT-NAME of the TABLE "DIDs Writable" referenced by the DIAG-SERVICE with SHORT-NAME "WriteDataByIdentifier" shall be "TA_S2E".

[Rule] The SHORT-NAME of the TABLE "Sessions" referenced by the DIAG-SERVICE with SHORT-NAME "DiagnosticSessionControl" shall be "TA_S10".

[Rule] The SHORT-NAME of the TABLE "ResetTypes" referenced by the DIAG-SERVICE with SHORT-NAME "ECUReset" shall be "TA_S11".

[Rule] The SHORT-NAME of the TABLE "SecurityAccess - requestSeed" referenced by the DIAG-SERVICE with SHORT-NAME "SecurityAccess_requestSeed" shall be "TA_S27_RS".

[Rule] The SHORT-NAME of the TABLE "SecurityAccess - sendKey" referenced by the DIAG-SERVICE with SHORT-NAME "SecurityAccess_sendKey" shall be "TA_S27_SK".

[Rule] The SHORT-NAME of the TABLE "CommunicationControlTypes" referenced by the DIAG-SERVICE with SHORT-NAME "CommunicationControl" shall be "TA_S28".

[Rule] The SHORT-NAME of the TABLE "LIDs Supportable" referenced by the support check DIAG-SERVICEs for one byte identifiers shall be "TS_SC_LID".

[Rule] The SHORT-NAME of the TABLE "IO Control - Temporary" which is referenced by the REQUEST of the DIAG-SERVICE with SHORT-NAME "IOControlStartTemporary" shall be "TA_S30_00".

[Rule] The SHORT-NAME of the TABLE "IO Control - Permanent" which is referenced by the REQUEST of the DIAG-SERVICE with SHORT-NAME "IOControlStartPermanent" shall be "TA_S30_20".

[Rule] The SHORT-NAME of the TABLE "IO Control - Status" which is referenced by the REQUEST of the DIAG-SERVICE with SHORT-NAME "IOControlStatus" shall be "TA_S30_01".

[Rule] The SHORT-NAME of the TABLE "IO Control - Stop" which is referenced by the REQUEST of the DIAG-SERVICE with SHORT-NAME "IOControlStop" shall be "TA_S30_11".

[Rule] The SHORT-NAME of the TABLE "IO Control Other Control Status" which is referenced by the POS-RESPONSEs of the DIAG-SERVICEs with the SHORT-NAMEs "IOControlStart-Temporary", "IOControlStartPermanent", "IOControlStatus" and "IOControlStop" shall be "TA_S30_PR".

[Rule] The SHORT-NAME of TABLE-ROWs contained in one of the TABLEs with SHORT-NAME "TA_S10", "TA_S11", "TA_S27_RS", "TA_S27_SK" or "TA_S85" shall be "TR_{TA}_{NN}", where {TA} shall be replaced by the containing TABLE's SHORT-NAME and {NN} shall be replaced with the two digit hex code of the sub function (that is: session state, reset type…) represented by the TABLE-ROW.

[Rule] The SHORT-NAMEs of TABLE-ROWs contained in one of the DID related TABLEs (that is: one of the TABLEs with SHORT-NAME "TA_S22", "TA_S2E", shall be "TR_{TA}_{NNNN}", where {TA} shall be replaced by the containing TABLE's SHORT-NAME and {NNNN} shall be replaced with the four digit hex code of the DID represented by the TABLE-ROW.



Confidential C

[Rule] If a STRUCTURE is referenced from one of the DID related TABLEs (that is: one of the TABLEs with SHORT-NAME "TA_S22", "TA_S2E", the SHORT-NAME of the STRUCTURE shall be "ST_{TA}_{NNNN}", where {TA} shall be replaced by the referencing TABLE's SHORT-NAME without its "TA_" prefix and {NNNN} shall be replaced with the four digit hex code of the DID whose data record is described by the STRUCTURE.

[Rule] The SHORT-NAME of STRUCTUREs referenced by TABLE "TA_S2F_03" shall be "ST_S2F_{NNNN}_03", where {NNNN} shall be replaced by the four-digit hex code of the DID represented by the referencing TABLE-ROW.

[Rule] The SHORT-NAME of the STRUCTUREs representing control state records of IO controls shall be "ST_S2F_{NNNN}_03_CS", where {NNNN} shall be replaced by the four-digit hex code of the IO controllable DID whose control state record is represented by that STRUCTURE.

[Rule] The SHORT-NAME of a STRUCTURE referenced by a flat service's request shall be "ST_FS{SID}_{#NNNN}_RQ", where {SID} shall be replaced by the referencing service's SID and {#NNNN} can be optional used and replaced to represent a sub function and / or identifier if several flat services for the same SID need to be defined.

[Rule] The SHORT-NAME of a STRUCTURE referenced by a flat service's positive response shall be "ST_FS{SID}_{#NNNN}_PR", where {SID} shall be replaced by the referencing service's SID and {#NNNN} can be optional used and replaced to represent a sub function and / or identifier if several flat services for the same SID need to be defined.

[Rule] If a PARAM is contained in one of the STRUCTUREs touched by the special naming rules defined in this section, then its SHORT-NAME shall be "PA_{ST}_{NNN}", where {ST} shall be replaced with the SHORT-NAME of the containing STRUCTURE and {NNN} shall be replaced by the three-digit running number of the PARAM in the STRUCTURE (that is: the first PARAM shall be numbered 000, the second 001, the third 002 etc.).

## 3.3.8 STATE-CHART

In Renault / Nissan ODX models two state charts are mandatory, one for session states and one for security levels. These STATE-CHARTs are defined by the diagnostic specification ESDs listed in Table 2.

The STATE-CHARTs get inherited into each BASE-/ECU-VARIANT, allowing ECU designers to reuse the states and state transitions predefined therein, e. g. to specify the set of states and transitions supported by a concrete ECU and to specify state preconditions for reading or writing a DID etc. The detailed mechanics and rules for these use cases are described in section 3.3.4

Implementation requirements:

[Rule] STATE-CHARTs must not be defined in DIAG-LAYERs other than the diagnostic specification ESDs listed in Table 2.

### 3.3.8.1 Session

The session related STATE-CHART shall predefine the following states:

| LONG-NAME | SHORT-NAME |
|---|---|
| Default Session 01 | Default_Session_01 |
| Programming Session 02 | Programming_Session_02 |
| Extended Diagnostic Session 03 | Extended_Diagnostic_Session_03 |
| Safety System Diagnostic Session 04 | Safety_System_Diagnostic_Session_04 |
| Supplier Session 60 | Supplier_Session_60 |
| Supplier Session 61 | Supplier_Session_61 |



Confidential C

| | |
|---|---|
| Supplier Session 62 | Supplier_Session_62 |
| Supplier Session 63 | Supplier_Session_63 |
| Supplier Session 64 | Supplier_Session_64 |
| Supplier Session 65 | Supplier_Session_65 |
| Supplier Session 66 | Supplier_Session_66 |
| Supplier Session 67 | Supplier_Session_67 |
| Supplier Session 68 | Supplier_Session_68 |
| Supplier Session 69 | Supplier_Session_69 |
| Supplier Session 6A | Supplier_Session_6A |
| Supplier Session 6B | Supplier_Session_6B |
| Supplier Session 6C | Supplier_Session_6C |
| Supplier Session 6E | Supplier_Session_6E |
| Supplier Session 6D | Supplier_Session_6D |
| Supplier Session 6F | Supplier_Session_6F |
| Supplier Session 70 | Supplier_Session_70 |
| Supplier Session 71 | Supplier_Session_71 |
| Supplier Session 72 | Supplier_Session_72 |
| Supplier Session 73 | Supplier_Session_73 |
| Supplier Session 74 | Supplier_Session_74 |
| Supplier Session 75 | Supplier_Session_75 |
| Supplier Session 76 | Supplier_Session_76 |
| Supplier Session 77 | Supplier_Session_77 |
| Supplier Session 78 | Supplier_Session_78 |
| Supplier Session 79 | Supplier_Session_79 |
| Supplier Session 7A | Supplier_Session_7A |
| Supplier Session 7B | Supplier_Session_7B |
| Supplier Session 7C | Supplier_Session_7C |
| Supplier Session 7D | Supplier_Session_7D |
| Supplier Session 7E | Supplier_Session_7E |

*Table 10 Predefined Session States*

Moreover, the session STATE-CHART shall predefine state transitions from each state to all other states listed in Table 10, ready to be reused by ECU designers as they see fit.

Implementation requirements:

[Rule] The SEMANTIC of the session state chart shall be set to “SESSION”.

[Rule] The session STATE-CHART shall not define states different than the ones listed in Table 10.

### 3.3.8.2 Security

The security access related STATE-CHART shall predefine the following security levels:

| LONG-NAME | SHORT-NAME |
|---|---|
| Locked | Locked |
| Unlocked #2 | Unlocked_2 |
| Unlocked #5 | Unlocked_5 |
| Unlocked #6 | Unlocked_6 |

*Table 11 Predefined Security Access Levels*



Confidential C

Moreover, the security access STATE-CHART shall encompass the possible state transitions between the different security access levels, ready to be reused by ECU designers as they see fit.

Implementation requirements:

[Rule] The SEMANTIC of the security access state chart shall be set to “SECURITY”.

[Rule] The security access STATE-CHART shall not define states different to the ones in Table 11.



Confidential C

## 3.4 ODX-C / ODX-CS

- Supported interfaces
- Applicable COMPARAM-SUBSETs
- Acceptable default values
- Rules for overwriting parameters

### 3.4.1 Overwriting of ISO 15765-2 Communication Parameters

[Rule] On CAN 11 bits and 29 bits PROTOCOL level, **CP_Br** shall be overwritten to value "*0*".

[Rule] On CAN 11 bits and 29 bits PROTOCOL level, **CP_Cs** shall be overwritten to value "*0*".

[Rule] On CAN 11 bits and 29 bits PROTOCOL level, **CP_P2Max** shall be overwritten to value "*900000*".

[Rule] On Can 11 bits FUNCTIONAL-GROUP level, **CP_CanFuncReqId** shall be overwritten to value "*2015*" (0x7DF).

[Rule] On Can 29 bits FUNCTIONAL-GROUP level, **CP_CanFuncReqId** shall be overwritten to value "417018865" (0x18DB33F1)

[Rule] On Can 11 bits FUNCTIONAL-GROUP level, **CP_CanFuncReqFormat** shall be overwritten to value "*normal unsegmented 11-bit transmit with padding disable*".

[Rule] On Can 29 bits FUNCTIONAL-GROUP level, **CP_CanFuncReqFormat** shall be overwritten to value "*normal unsegmented 29-bit transmit with padding disable*".

[Rule] On respective FUNCTIONAL-GROUP and BASE-VARIANT levels, **CP_UniqueRespIdTable** shall be overwritten to either define 11bit or 29bit CAN identifiers (including 11 or 29 bits format).

### 3.4.2 Overwriting of ISO_14229_5_DIS_2015 Communication Parameters

[Rule] On DoIP PROTOCOL level, **CP_TesterPresentAddrMode** shall be overwritten to value "*Physical*"

### 3.4.3 Overwriting of ISO_13400_2_DIS_2015 Communication Parameters

[Rule] On DoIP FUNCTIONAL-GROUP level, **CP_DoIPLogicalFunctionalAddress** shall be overwritten to value "*58368*" (0xE400).

[Rule] On DoIP FUNCTIONAL-GROUP level, **CP_DoIPLogicalTesterAddress** shall be overwritten to value "*3712*" (0x0E80).

[Rule] On DoIP FUNCTIONAL-GROUP and BASE-VARIANT levels, **CP_UniqueRespIdTable** shall be overwritten to define the ECU *logical address*



Confidential C

# Annexes

## Annex A Prefixes for XML-IDs of ODX Object Instances

| Element | Prefix |
|---|---|
| ADDITIONAL-AUDIENCE | AA |
| BASE-VARIANT | BV |
| CHECKSUM | CS |
| COMPANY-DATA | CD |
| COMPANY-DOC-INFO | CDI |
| all BASE-COMPARAM (COMPARAM, COMPLEX-COMPARAM) | CP |
| COMPARAM-SPEC | CPS |
| COMPARAM-SUBSET | CPSS |
| CONFIG-DATA | CFD |
| all CONFIG-ITEM (CONFIG-ID-ITEM, DATA-ID-ITEM, OPTION-ITEM, SYSTEM-ITEM) | CFI |
| CONFIG-RECORD | CFR |
| DATABLOCK | DB |
| DATA-RECORD | DR |
| all DIAG-COMM (DIAG-SERVICE, SINGLE-ECU-JOB) | DC |
| DIAG-LAYER-CONTAINER | DLC |
| DIAG-OBJECT-CONNECTOR | DOC |
| DIAG-VARIABLE | DV |
| all DOP-BASE (DATA-OBJECT-PROP, DTC-DOP, ENV-DATA-DESC, ENV-DATA, STRUCTURE, STATIC-FIELD, DYNAMIC-LENGTH-FIELD, DYNAMIC-ENDMARKER-FIELD, END-OF-PDU-FIELD, MUX) | DOP |
| DTC | DTC |
| ECU-CONFIG | EC |
| ECU-MEM | EM |
| ECU-MEM-CONNECTOR | EMC |
| ECU-SHARED-DATA | ESD |
| ECU-VARIANT | EV |
| EXPECTED-IDENT | EID |
| EXTERNAL-ACCESS-METHOD | EAM |
| FLASH | FL |
| FLASH-CLASS | FC |
| all FLASHDATA (EXTERN-FLASHDATA, INTERN-FLASHDATA) | FD |
| FUNCTIONAL-GROUP | FG |
| FUNCTION-DICTIONARY | FND |
| FUNCTION-NODE | FN |
| FUNCTION-NODE-GROUP | FNG |
| FUNCT-CLASS | FNC |
| GLOBAL-NEG-RESPONSE | GNR |
| all INFO-COMPONENT (ECU-PROXY, MODEL-YEAR, OEM, VEHICLE-MODEL, VEHICLE-TYPE) | IC |
| ITEM-VALUE | IV |
| LIBRARY | LIB |
| all LOGICAL-LINK (GATEWAY-LOGICAL-LINK, MEMBER-LOGICAL-LINK) | LL |



Confidential C

| | |
|---|---|
| MULTIPLE-ECU-JOB | MEJ |
| MULTIPLE-ECU-JOB-SPEC | MEJS |
| NEG-RESPONSE | NR |
| OUTPUT-PARAM | OP |
| OWN-IDENT | OID |
| all PARAM (CODED-CONST, DYNAMIC, LENGTH-KEY, MATCHING-REQUEST-PARAM, NRC-CONST, PHYS-CONST, RESERVED, SYSTEM, TABLE-ENTRY, TABLE-KEY, TABLE-STRUCT, VALUE) | PA |
| PHYSICAL-DIMENSION | PD |
| PHYSICAL-VEHICLE-LINK | PVL |
| PHYS-MEM | PM |
| all PHYS-SEGMENT (ADDRDEF-PHYS-SEGMENT, SIZEDEF-PHYS-SEGMENT) | PSG |
| POS-RESPONSE | PR |
| PROTOCOL | PT |
| PROT-STACK | PS |
| REQUEST | RQ |
| SDG-CAPTION | SDG |
| SEGMENT | SG |
| SESSION | SE |
| SESSION-DESC | SED |
| STATE | ST |
| STATE-CHART | STC |
| STATE-TRANSITION | STT |
| SUB-COMPONENT | SC |
| SUB-COMPONENT-PARAM-CONNECTOR | SCPC |
| TABLE | TA |
| TABLE-ROW | TR |
| TEAM-MEMBER | TM |
| UNIT | UN |
| VARIABLE-GROUP | VG |
| VEHICLE-CONNECTOR | VC |
| VEHICLE-CONNECTOR-PIN | VCP |
| VEHICLE-INFORMATION | VI |
| VEHICLE-INFO-SPEC | VIS |

*Table 12 Prefixes for XML-IDs of ODX Object Instances*



Confidential C